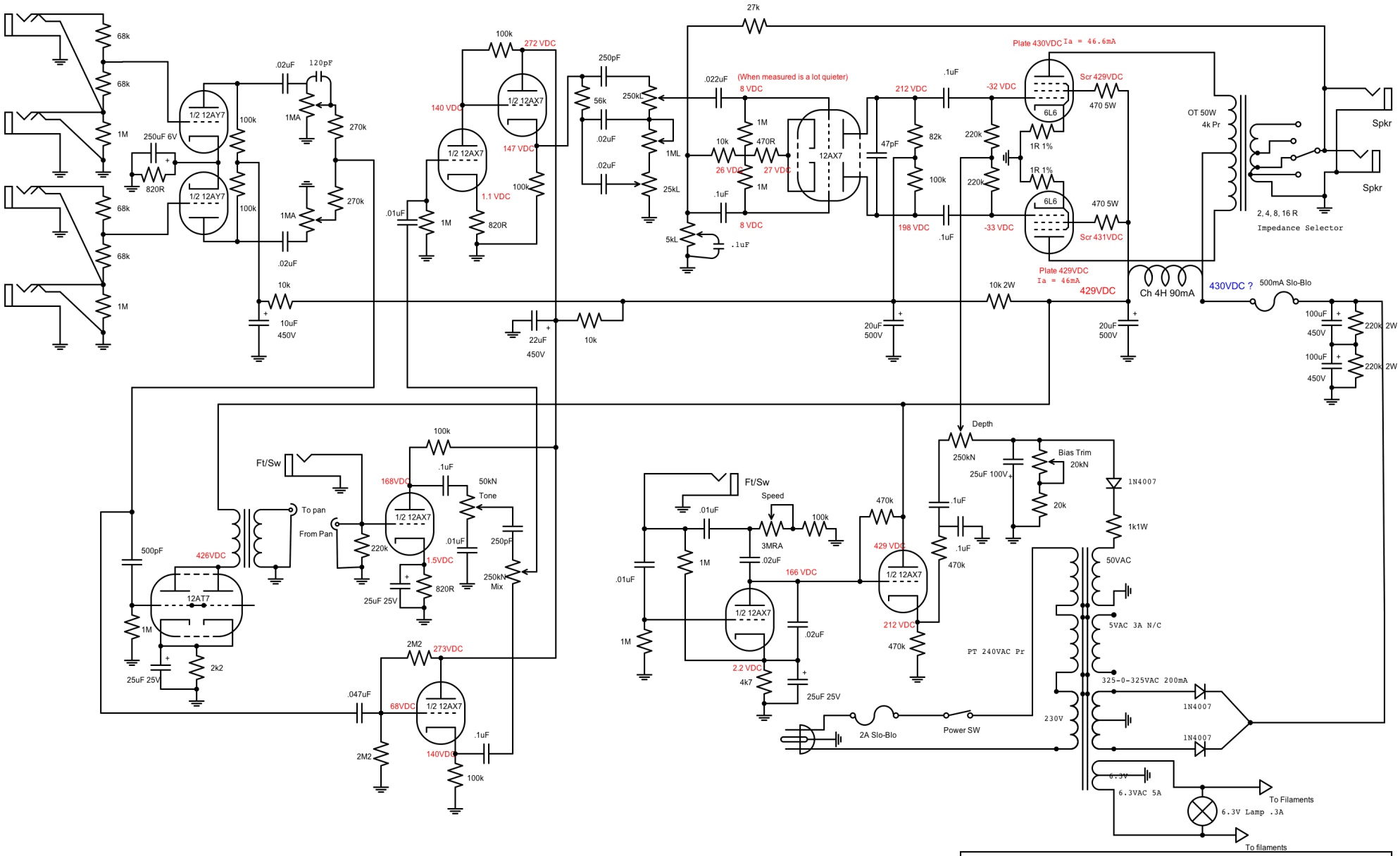

Tweed Bassman +		
6G15/BF Reverb 6G16 Trem		
tubeswell	Rev 12 d 7/1/09	Page #