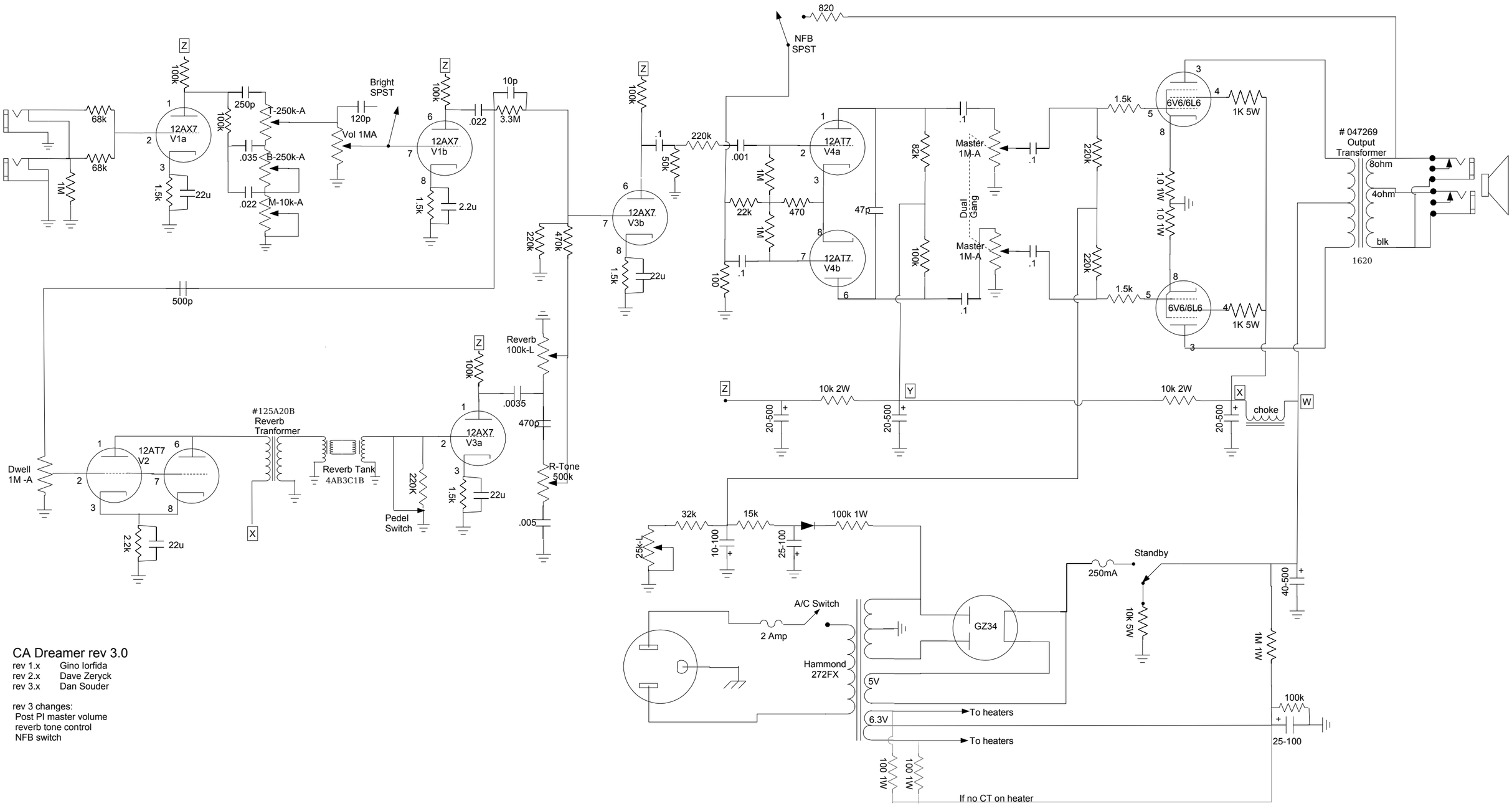

CA Dreamer rev 3.0

rev 1.x Gino Iorfida
rev 2.x Dave Zeryck
rev 3.x Dan Souder

rev 3 changes:
Post PI master volume
reverb tone control
NFB switch