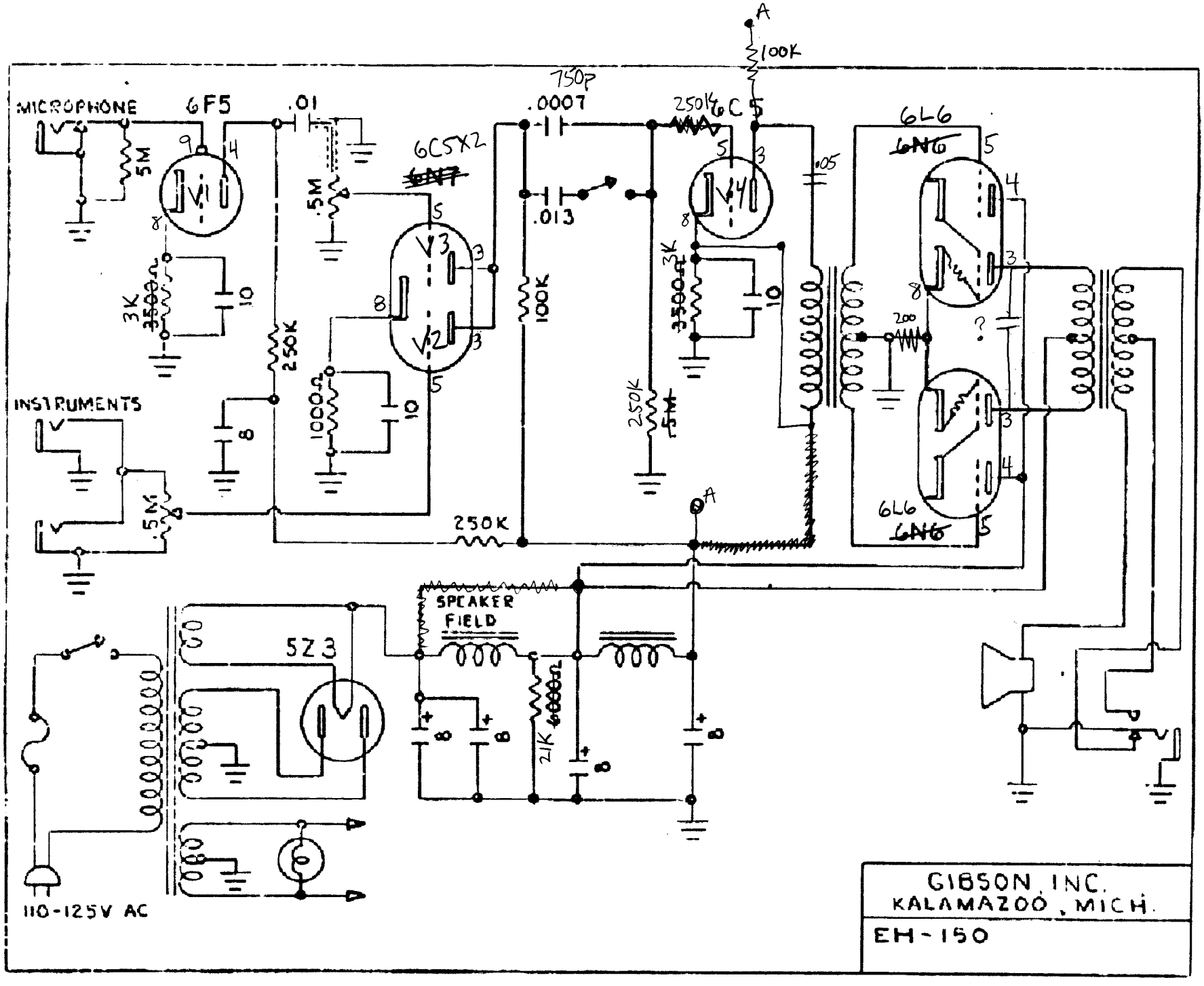
MICROPHONE
6F5
.01
750p
.0007
250K
6C
100K
A
6C5X2
6N7
.5M
5M
.013
3K
3500Ω
10
250K
1000Ω
8
INSTRUMENTS
.5M
250K
.05
6L6
6N6
200
?
SPEAKER
FIELD
5Z3
21K
6000Ω
110-125V AC
GIBSON, INC.
KALAMAZOO, MICH.
EH-150