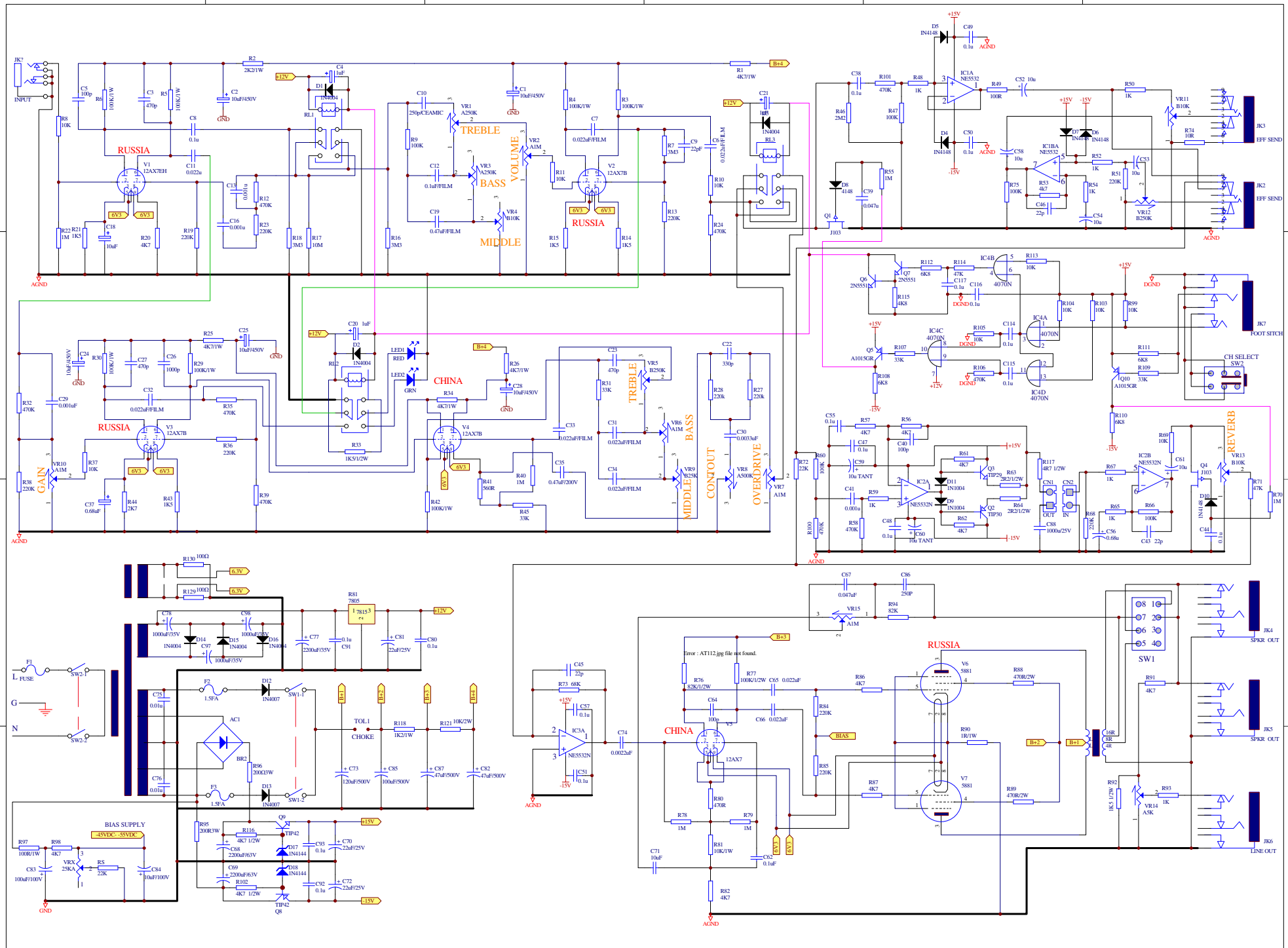

RUSSIA
TREBLE
BASS
MIDDLE
VOLUME
CHINA
GAIN
CONTOUT
OVERDRIVE
REVERB
CH SELECT
SW2
SW1
JK3 EFF SEND
JK2 EFF SEND
JK7 FOOT SITCH
JK4 SPKR OUT
JK5 SPKR OUT
JK6 LINE OUT
BIAS SUPPLY
-45VDC- -55VDC
TOL1 CHOKE
Error : AT112.jpg file not found.