REV	Eng	Date:	Revision Description	ECN#
A				
B				
C				
D				
E				
F				

INDEX

SHEET	DESCRIPTION
1	MAIN

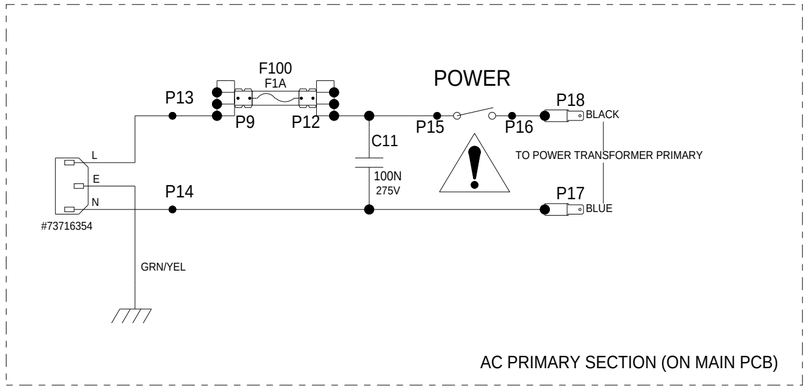

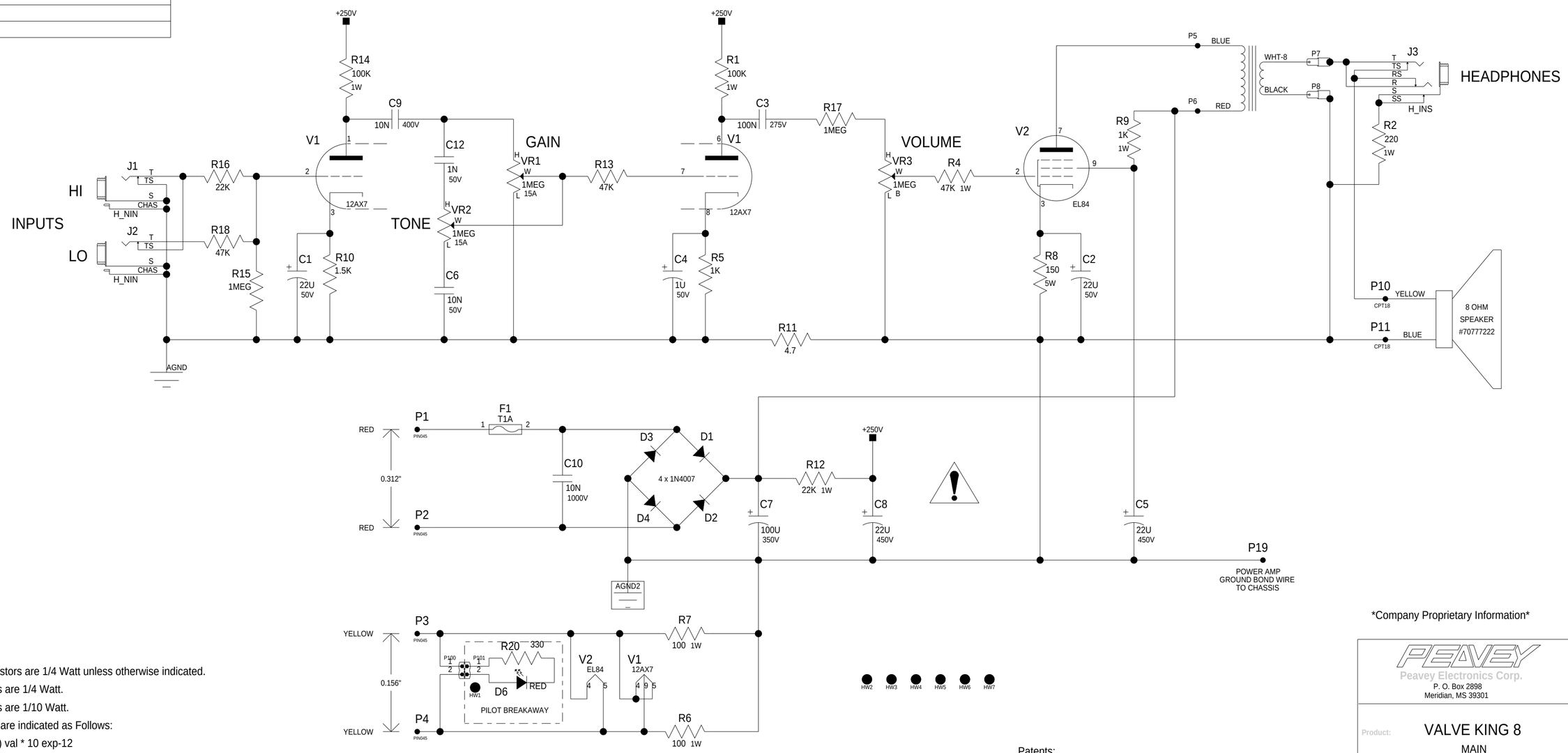

Note: All thru hole Resistors are 1/4 Watt unless otherwise indicated.
All SMT 1206 Resistors are 1/4 Watt.
All SMT 0805 Resistors are 1/10 Watt.
Note Capacitor Values are indicated as Follows:
val P = pF (picoFarads) val * 10 exp-12
val N = nF (nanoFarads) val * 10 exp-9 (1N=1000pF, 100N=0.1uF)
val U = uF (microFarads) val * 10 exp-6

Company Proprietary Information

PEAVEY
Peavey Electronics Corp.
P. O. Box 2898
Meridian, MS 39301

Product: VALVE KING 8

Title: MAIN

Project Number:

Eng: J. C. FIELDS | Release Date:

C | Sheet 1 of 1 | Saved: 4-4-2005_10:03

Patents:

Copyright Peavey Electronics Corporation 2005.