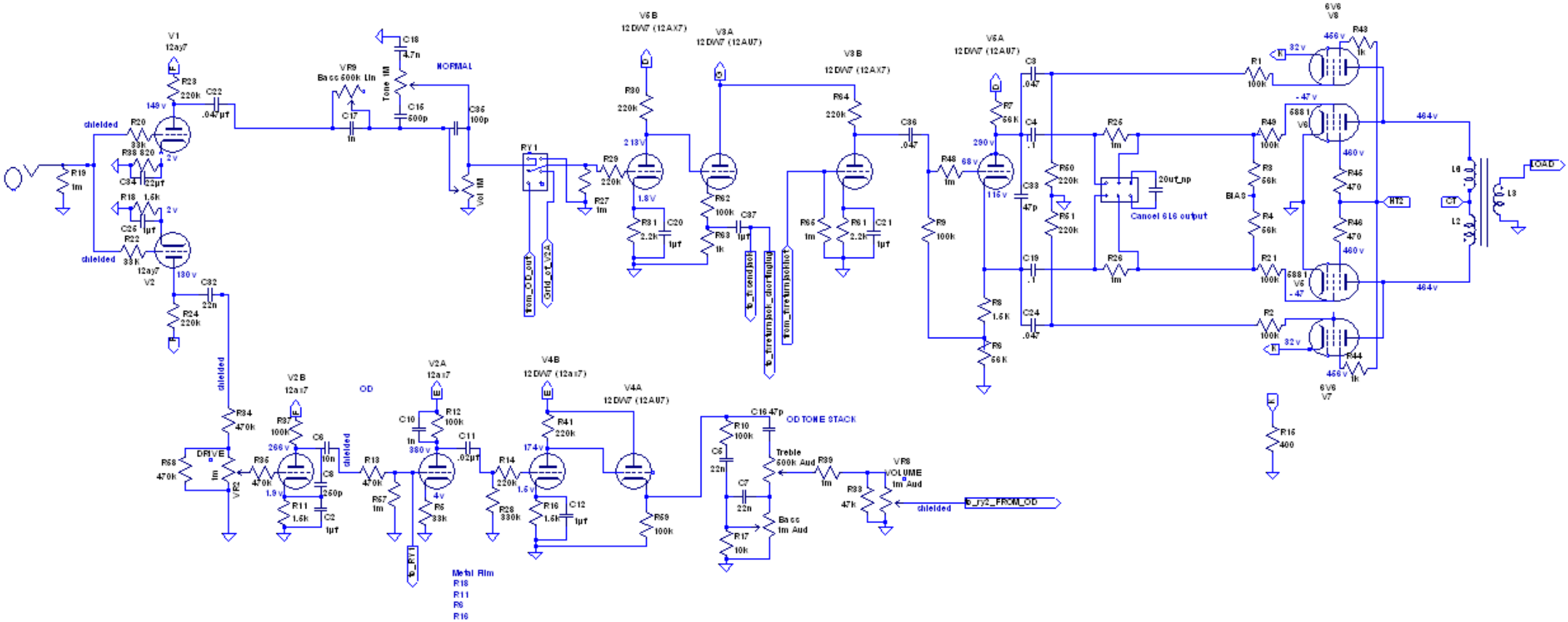Revolution 100/50/30