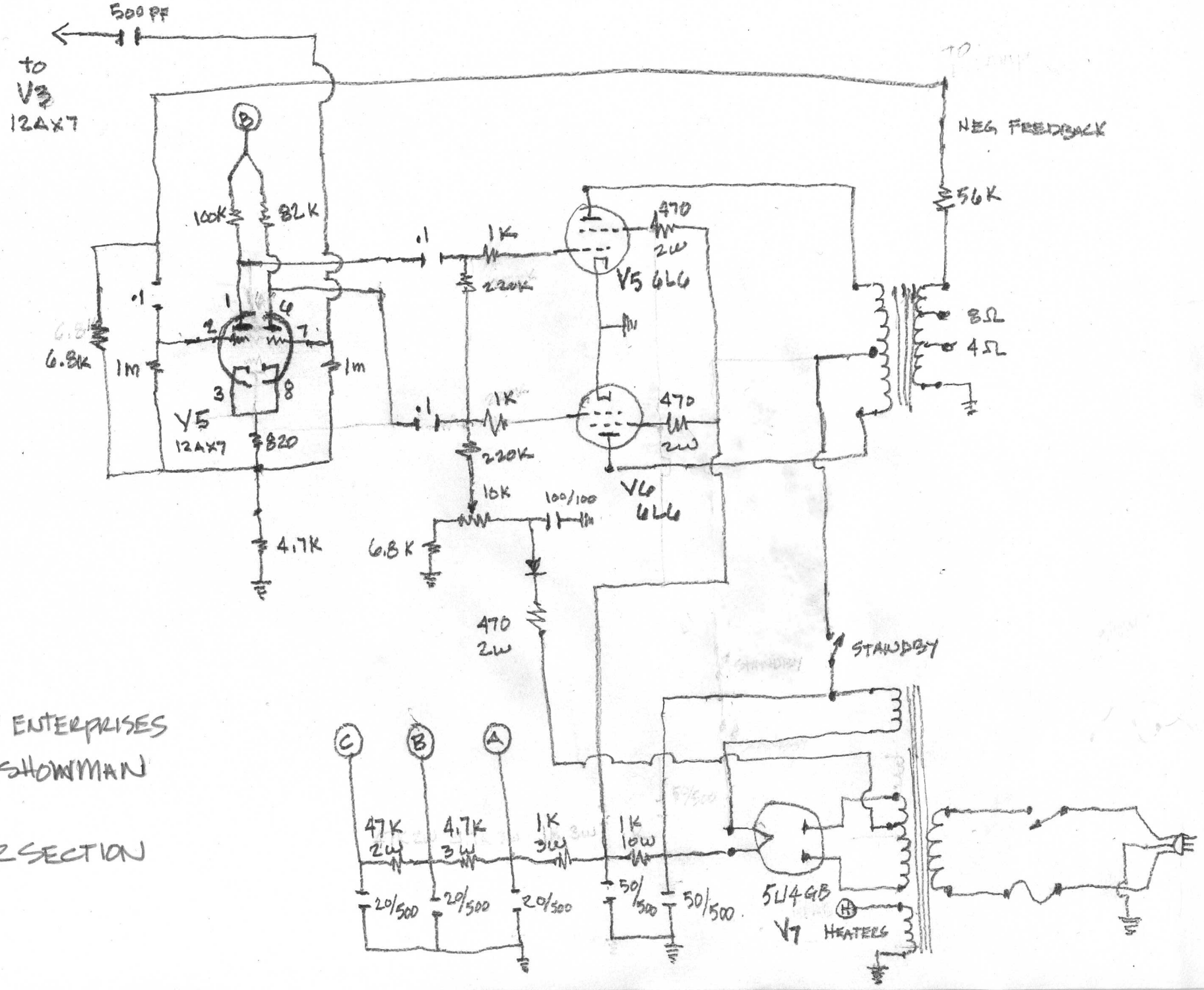

GABBY ENTERPRISES

DUAL SHOWMAN

FAKE

POWER SECTION

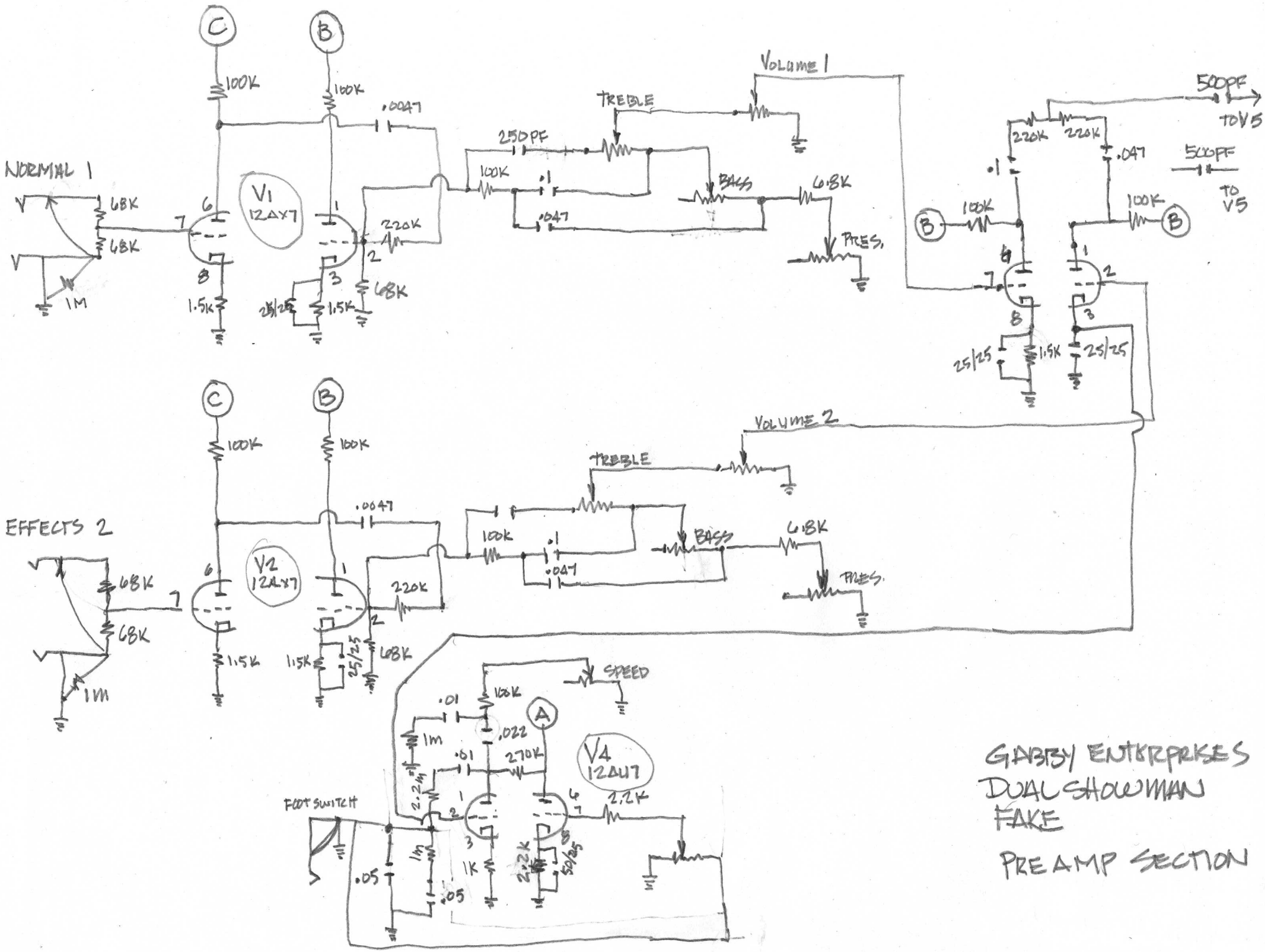

GABBY ENTERPRISES
DUAL SHOWMAN
FAKE

PREAMP SECTION