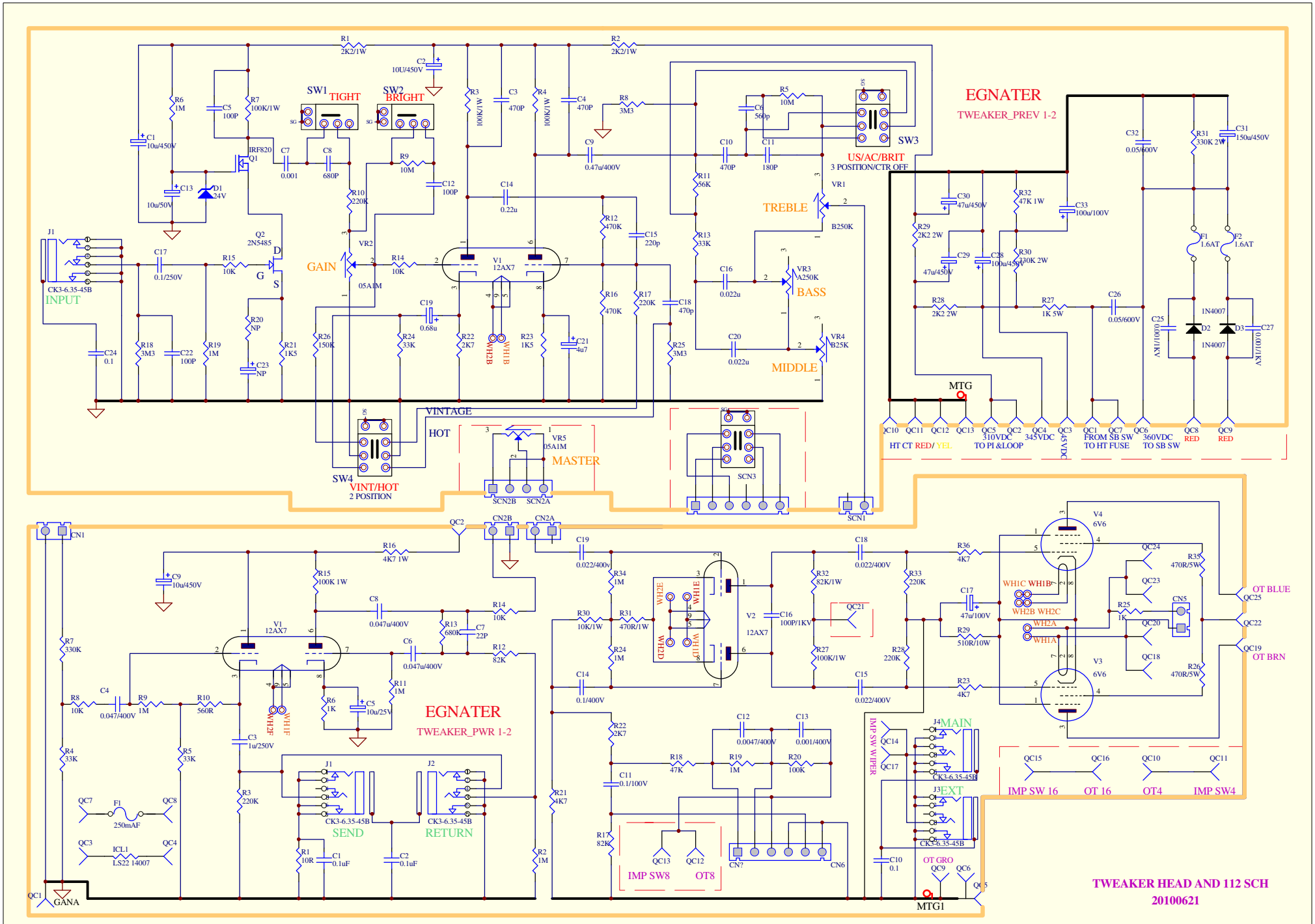
EGNATER
TWEAKER_PREV 1-2
SW1 TIGHT
SW2 BRIGHT
SW3
US/AC/BRIT
3 POSITION/CTR OFF
TREBLE
BASS
MIDDLE
GAIN
VINTAGE
HOT
SW4
VINT/HOT
2 POSITION
MASTER
INPUT
CK3-6.35-45B
MTG
HT CT RED/ YEL
310VDC
TO PI &LOOP
345VDC
FROM SB SW
TO HT FUSE
360VDC
TO SB SW
RED
RED
EGNATER
TWEAKER_PWR 1-2
SEND
RETURN
CK3-6.35-45B
IMP SW8
OT8
IMP SW WIPER
MAIN
EXT
OT BLUE
OT BRN
IMP SW 16
OT 16
OT4
IMP SW4
GANA
MTG1
TWEAKER HEAD AND 112 SCH
20100621