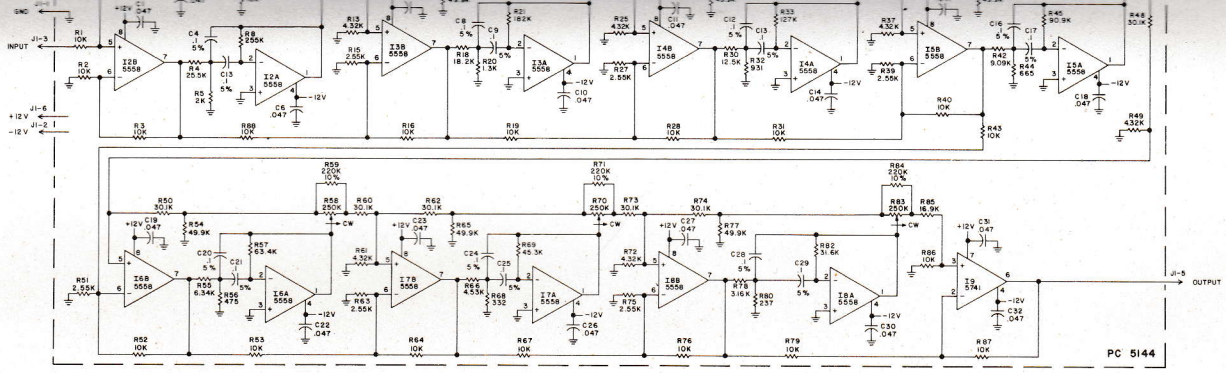

SYMBOL	KUSTOM PART NO.
I1, I9	007-7042-00
I2, I3, I4, I5, I6, I7, I8	007-7023-00
R11, R23, R35, R47, R59, R71, R84	130-0224-15
R10, R22, R34, R46, R58, R70, R83	133-0061-00
J1	030-2035-00

NOTES:
1. ALL RESISTORS ARE 1/8 W, 1% PRECISION UNLESS NOTED.
2. ALL CAPACITOR VALUES ARE IN MICROFARADS, UNLESS NOTED.

HIGHEST REF. NOS.: R88, C32, I9

REF NOS. NOT USED: R7, R81

REV	DATE	ENGR	REQ	PART NUMBER	DESCRIPTION	ITEM

Kustom ELECTRONICS, INC. CHANUTE, KAN. 66720

DRN SHAY DATE 4-74 TOLERANCES NONE
CHK DATE 4-7-74 NAME BASS EQ. BD. PC5144
ENGR
SCALE NONE SHT 1 OF 1 PART NUMBER 002-5144-01

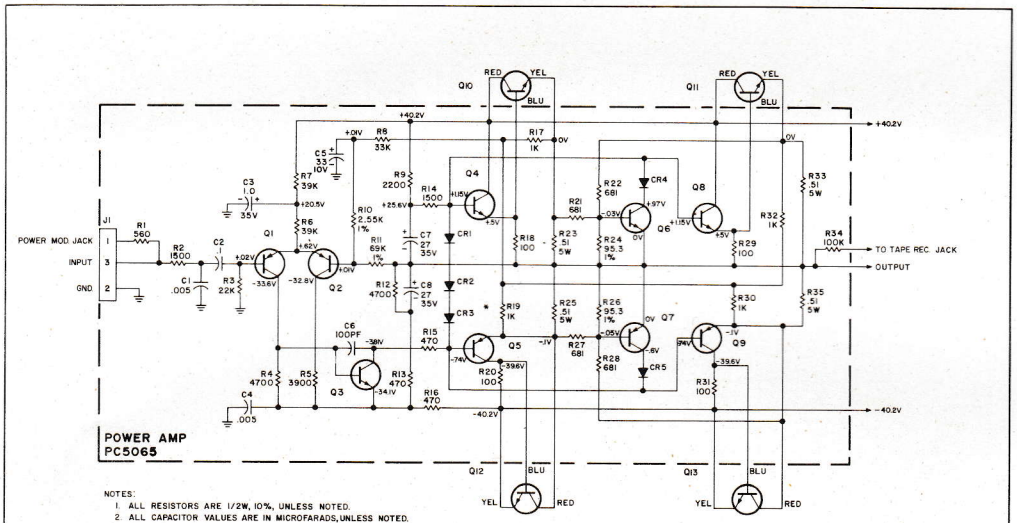

NOTES:
1. ALL RESISTORS ARE 1/2W, 10%, UNLESS NOTED.
2. ALL CAPACITOR VALUES ARE IN MICROFARADS, UNLESS NOTED.
*3. DIODE CR3 IS MOUNTED IN A CLIP ON THE CHASSIS.
4. TRANSISTORS Q10, Q11, Q12, & Q13 ARE MOUNTED IN A BRACKET ON THE CHASSIS.
5. VOLTAGE MEASUREMENTS ARE WITH POWER ON, NO SIGNAL, NO LOAD AND MEASURED FROM COMMON GROUND.

SYMBOL	KUSTOM PART NO.
CR1 & CR2	007-6011-00
CR3	007-6006-00
CR4 & CR5	007-6016-00
Q1 & Q2	007-0009-00
Q3	007-0002-00
Q4 & Q8	007-0011-00
Q5 & Q9	007-0012-00
Q6	007-0005-00
Q7	007-0006-00
J1	030-2034-00
Q10 THRU Q13	007-0000-00

REV	DATE	ENGR	REQ	PART NUMBER	DESCRIPTION	ITEM
1	4-73	JCS				
2	7-73	JCS				
3	4-88	JCS				
4	5-87	JCS				
5	2-88	JCS				

Kustom ELECTRONICS, INC. CHANUTE, KAN. 66720

DRN SPAITS 5-71 DATE TOLERANCES NONE MATERIAL NONE
CHK DATE NAME SCHEMATIC DIAGRAM - POWER AMP PC5065
ENGR
SCALE NONE SHT 1 OF 1 PART NUMBER 002-5065-00

REV.	UNIT	DATE

KUSTOM IV
BASS
P/N 006-0102-00