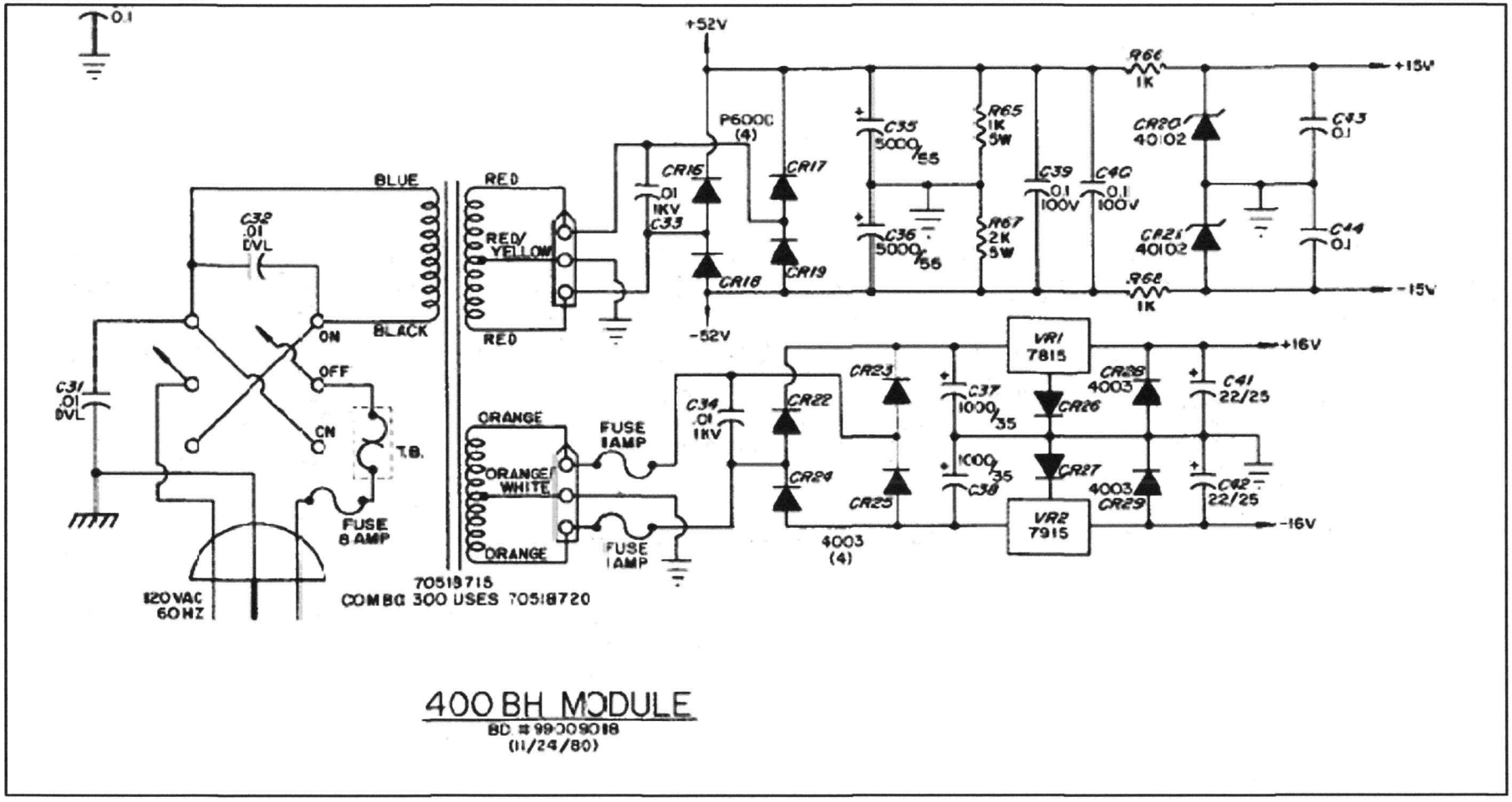

400 BH MODULE

BD # 99009018
(11/24/80)

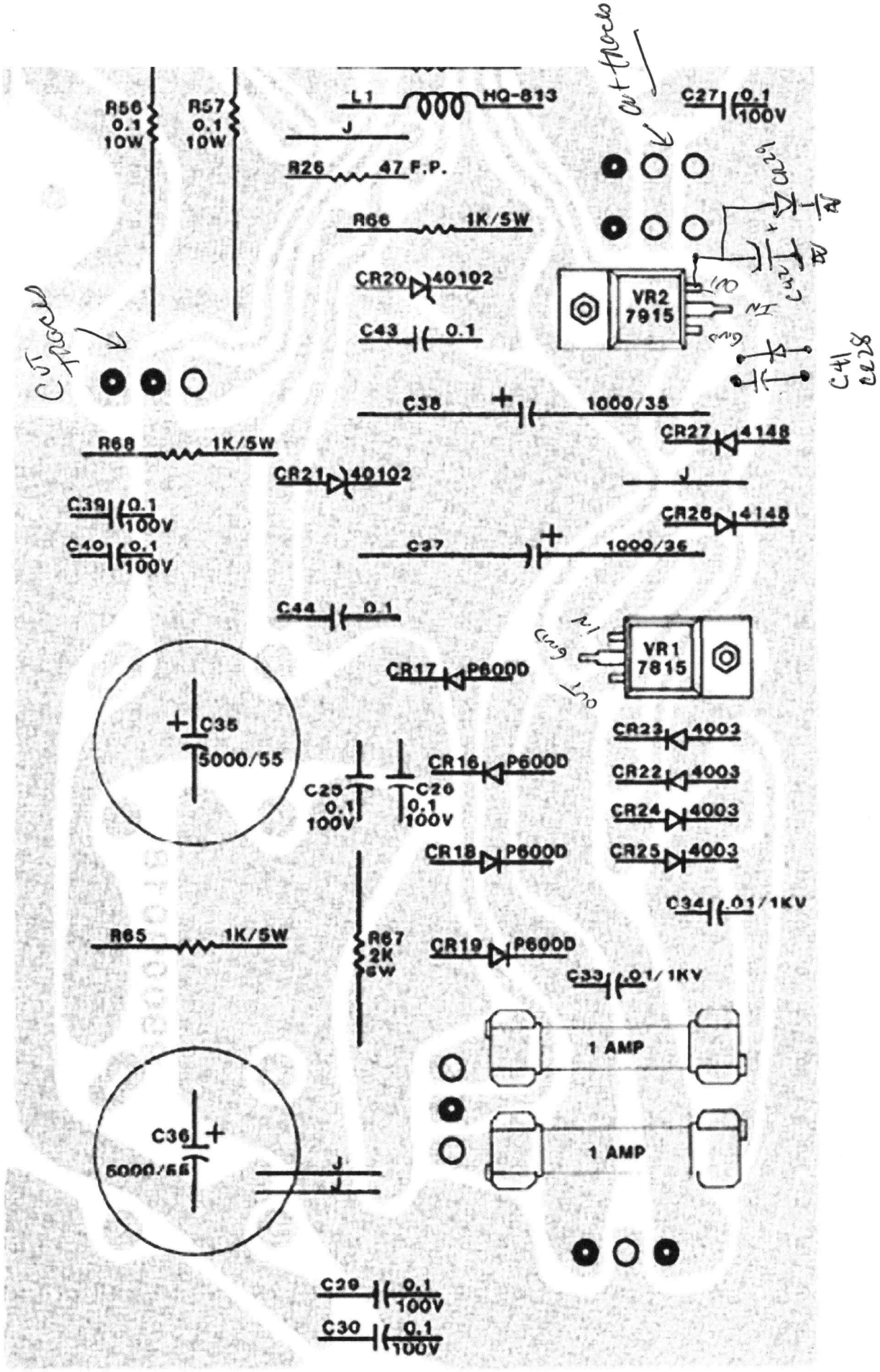
R56 0.1 10W
R57 0.1 10W
L1
HQ-813
J
R26 47 F.P.
R66 1K/5W
CR20 40102
C43 0.1
VR2 7915
C27 0.1 100V
C38 1000/35
CR27 4148
R68 1K/5W
CR21 40102
J
C39 0.1 100V
C40 0.1 100V
CR26 4148
C37 1000/35
C44 0.1
VR1 7815
CR17 P600D
C35 5000/55
CR23 4003
CR16 P600D
CR22 4003
C25 0.1 100V
C26 0.1 100V
CR24 4003
CR18 P600D
CR25 4003
C34 .01/1KV
R65 1K/5W
R67 2K 5W
CR19 P600D
C33 .01/1KV
1 AMP
1 AMP
C36 5000/55
J
J
C29 0.1 100V
C30 0.1 100V