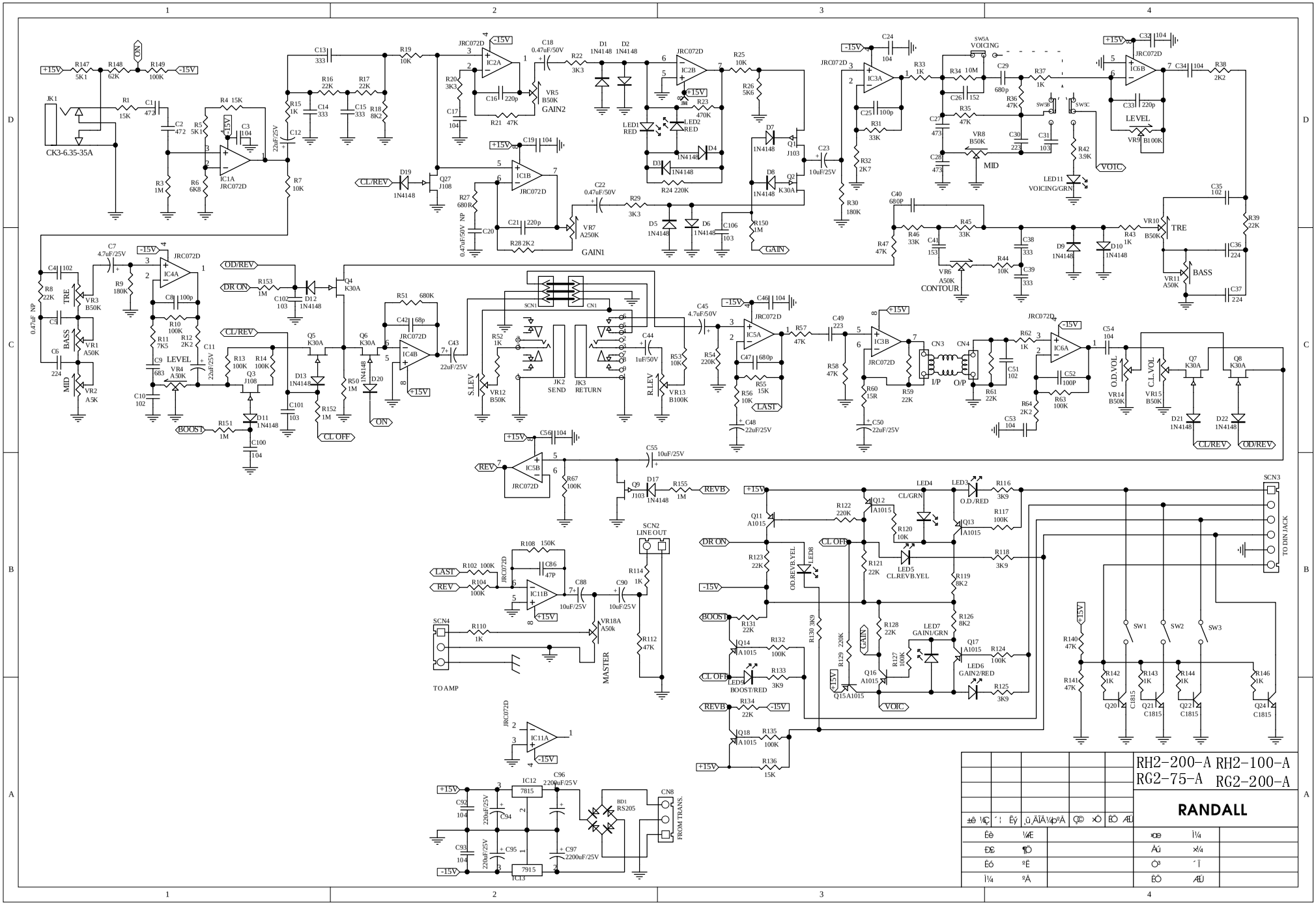

RH2-200-A RH2-100-A
RG2-75-A RG2-200-A
RANDALL
CK3-6.35-35A
JK1
IC1A JRC072D
IC1B JRC072D
IC2A JRC072D
IC2B JRC072D
IC3A JRC072D
IC3B JRC072D
IC4A JRC072D
IC4B JRC072D
IC5A JRC072D
IC5B JRC072D
IC6A JRC072D
IC6B JRC072D
IC11A JRC072D
IC11B JRC072D
IC12 7815
IC13 7915
GAIN1
GAIN2
GAIN
MID
LEVEL
TRE
BASS
CONTOUR
LEVEL
MASTER
SCN1
CN1
JK2 SEND
JK3 RETURN
S.LEV
R.LEV
LAST
BOOST
CL OFF
OD/REV
DR ON
CL/REV
REV
REVB
VOIC
VOICING
VOICING/GRN
LED1 RED
LED2 RED
LED3 O.D./RED
LED4 CL/GRN
LED5 CL.REVB.YEL
LED6 GAIN2/RED
LED7 GAIN1/GRN
LED8 OD.REVB.YEL
LED9 BOOST/RED
LED11 VOICING/GRN
SCN2 LINE OUT
SCN3 TO DIN JACK
SCN4 TO AMP
CN8 FROM TRANS.
BD1 RS205
SW1
SW2
SW3
SW5A VOICING
SW5B
SW5C