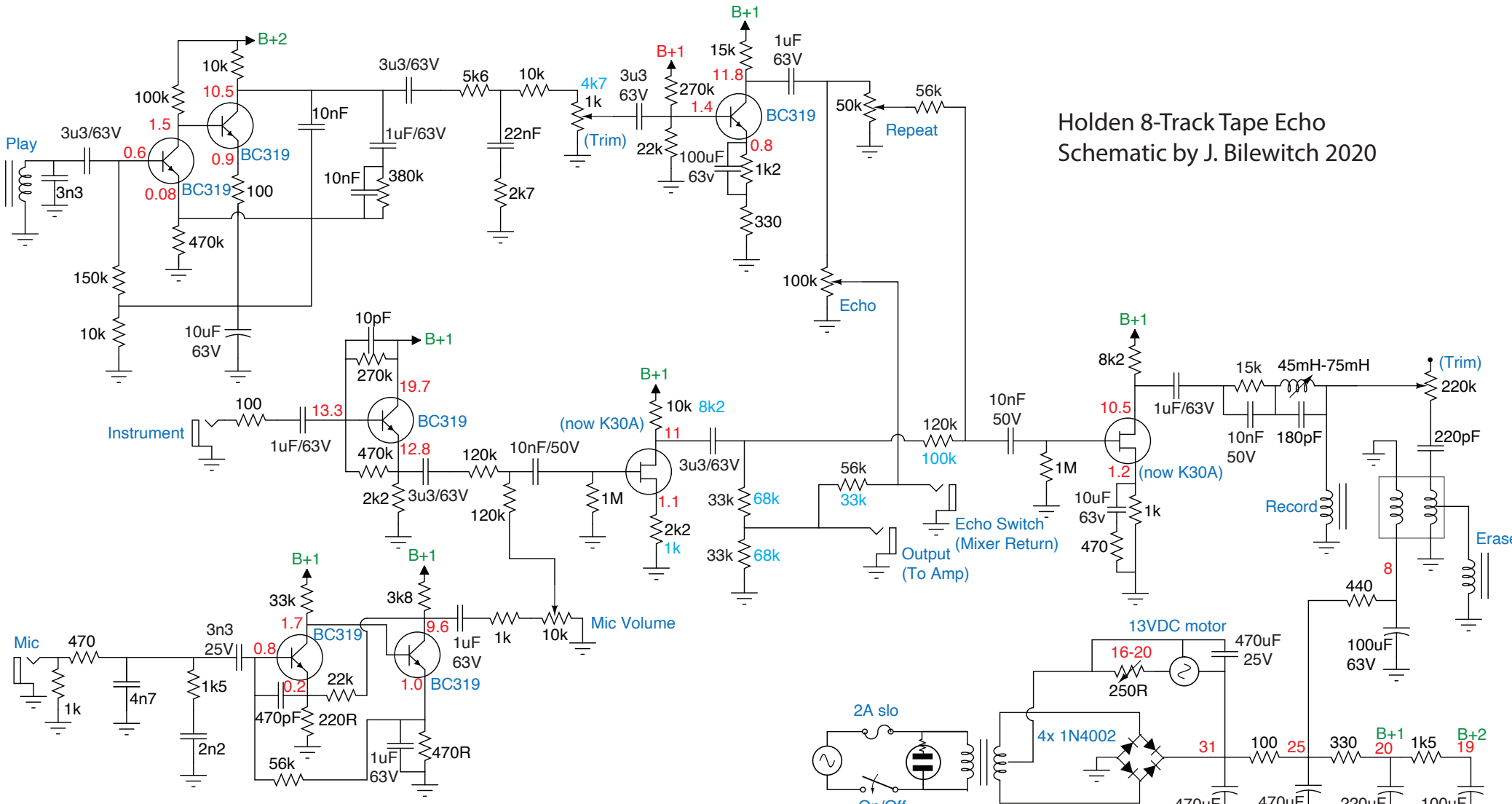


Monitor test signal at Playback head; adjust bias for maximum signal, then increase bias slightly.