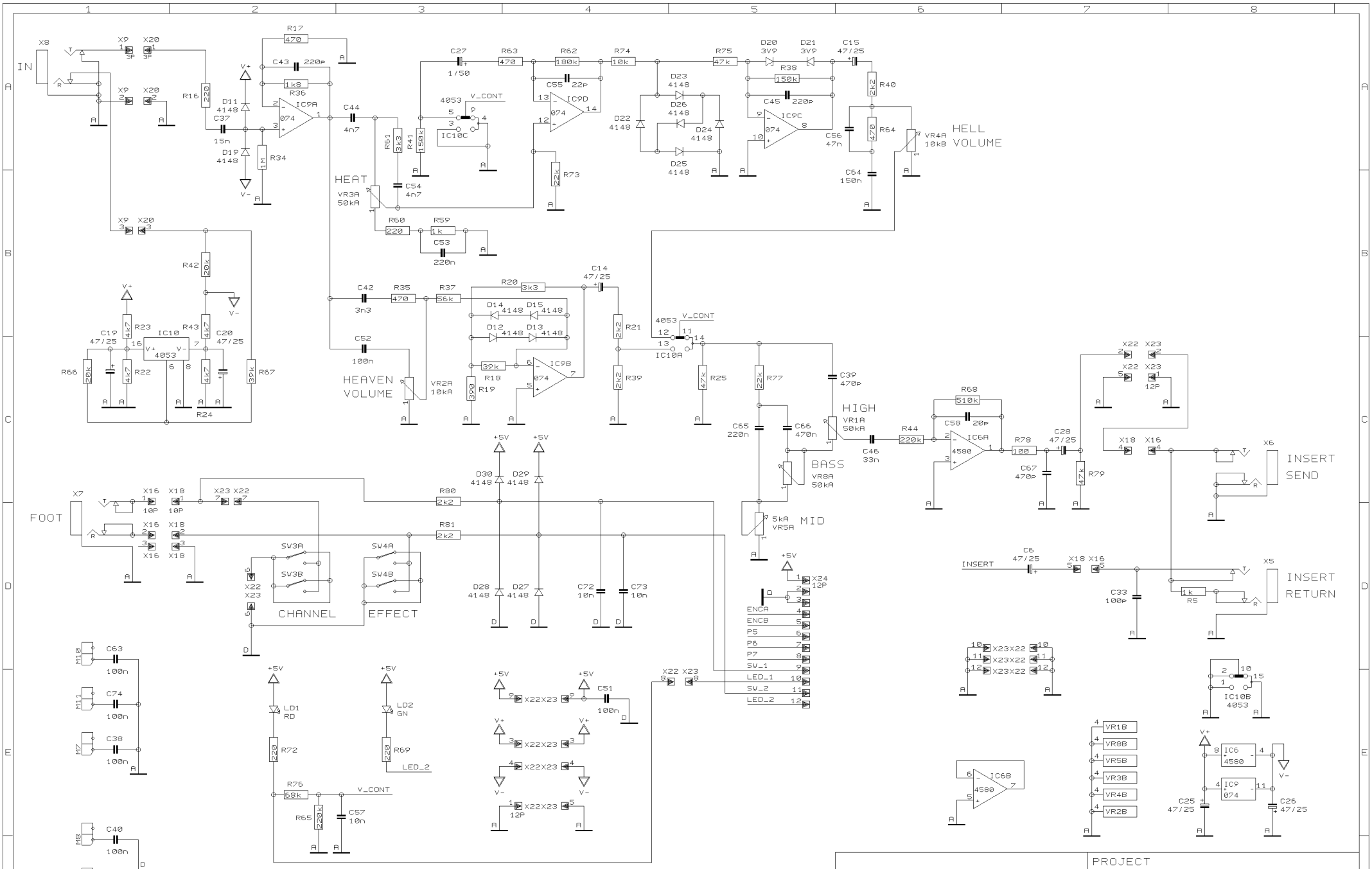

REVISIONS		
J (240999)		
DRAWN BK	CHECKED	DATE 19.02. 1 11:12

BEHRINGER®

Specialized Studio Equipment

PROJECT
GX112
BLUE DEVIL
INPUT SECTION

SHEET 1 OF 2 SHEETS TOTAL

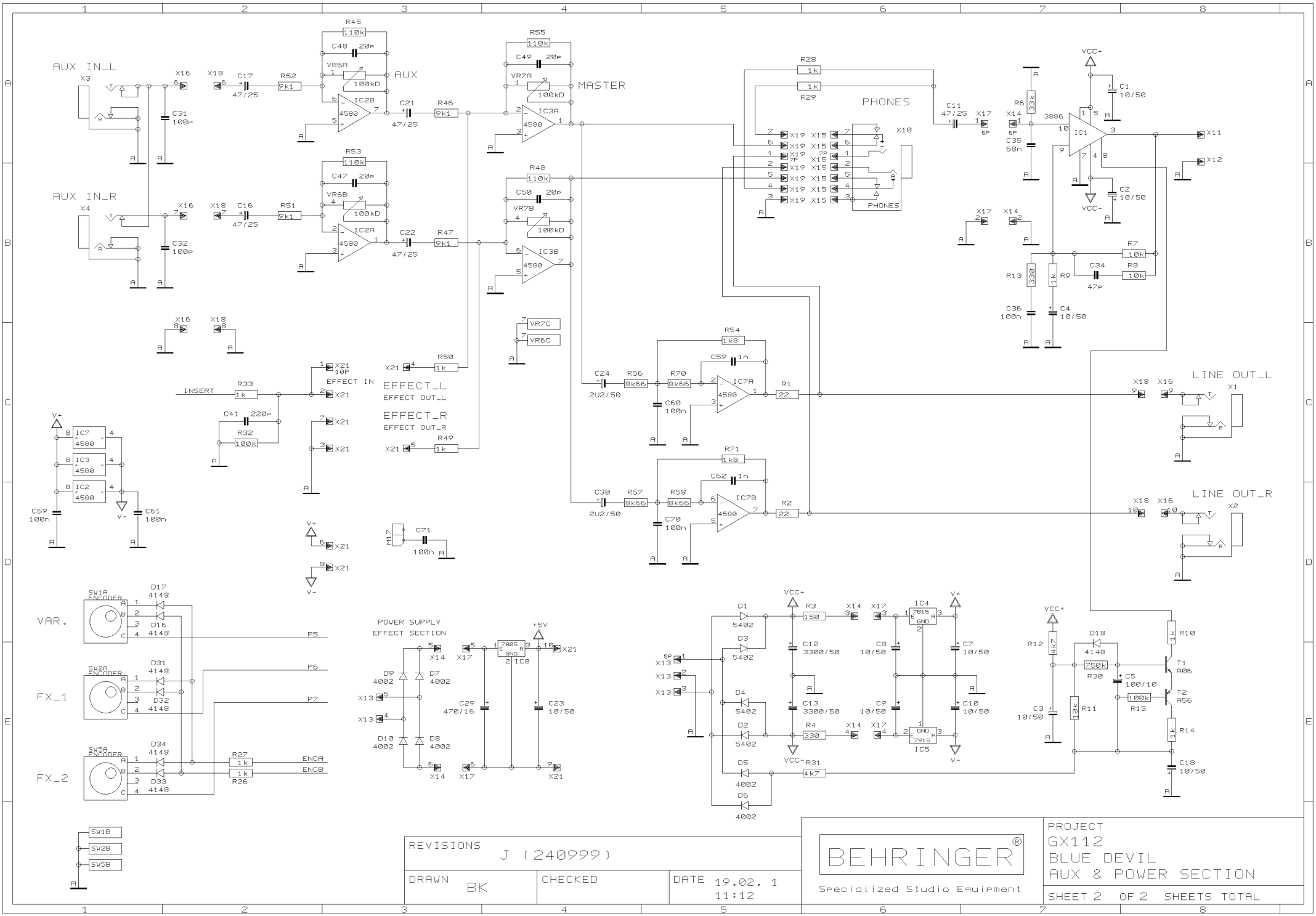
AUX IN_L
AUX IN_R
AUX
MASTER
PHONES
EFFECT IN
EFFECT_L
EFFECT OUT_L
EFFECT_R
EFFECT OUT_R
INSERT
LINE OUT_L
LINE OUT_R
VAR.
FX_1
FX_2
POWER SUPPLY
EFFECT SECTION
REVISIONS
J (240999)
DRAWN
BK
CHECKED
DATE
19.02. 1
11:12
BEHRINGER®
Specialized Studio Equipment
PROJECT
GX112
BLUE DEVIL
AUX & POWER SECTION
SHEET 2 OF 2 SHEETS TOTAL