BEHRINGER T-1
Tube Condenser Mic

Simple view (two PCBs combined)

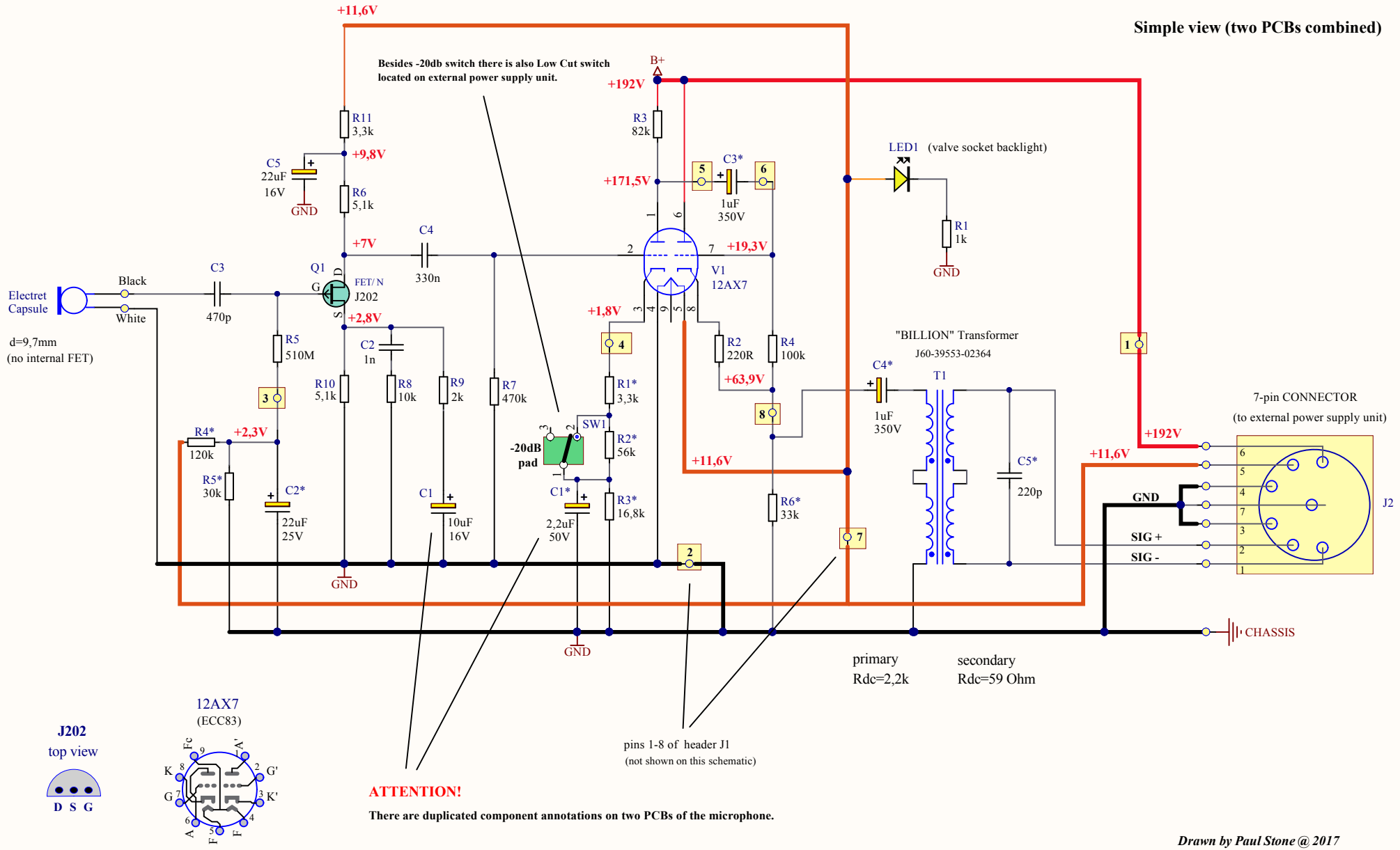

Drawn by Paul Stone @ 2017

This schematic is NOT original Behringer source.