DWG.No. 2466-61-02

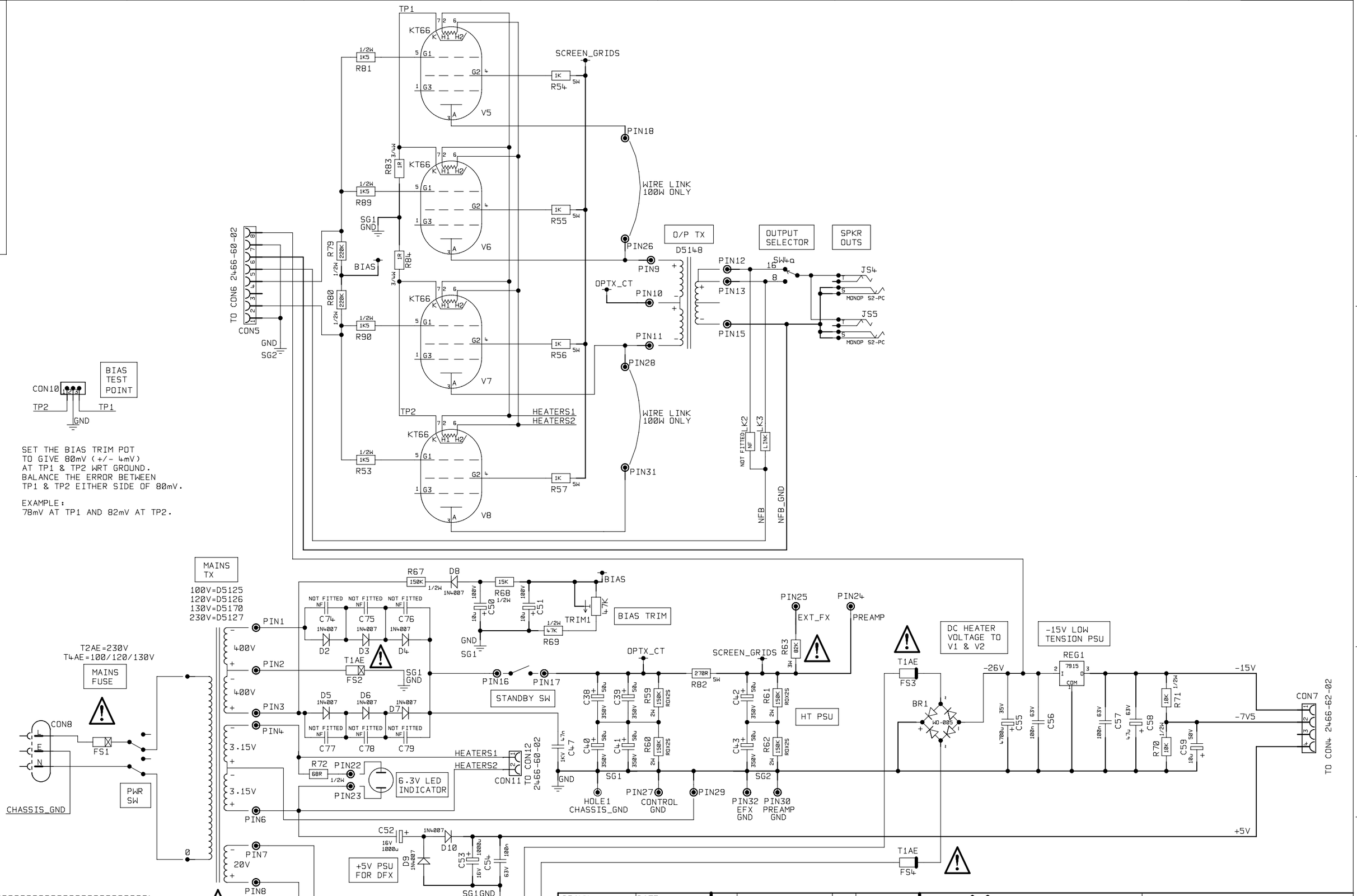

DRAWN	DATE
S.R.D.	05-09-05

MODEL 2466

ISS	ECO NUMBER	CHK	DATE
3	C39 C42 DUAL PITCH		23-11-06

Marshall

© MARSHALL AMPLIFICATION PLC
DENBIGH ROAD. BLETCHLEY. MILTON KEYNES. MK1 1DQ.
TEL (01908) 375411 FAX (01908) 376118

TITLE 100W POWERAMP

DWG.No 2466-61-02 ISS 3