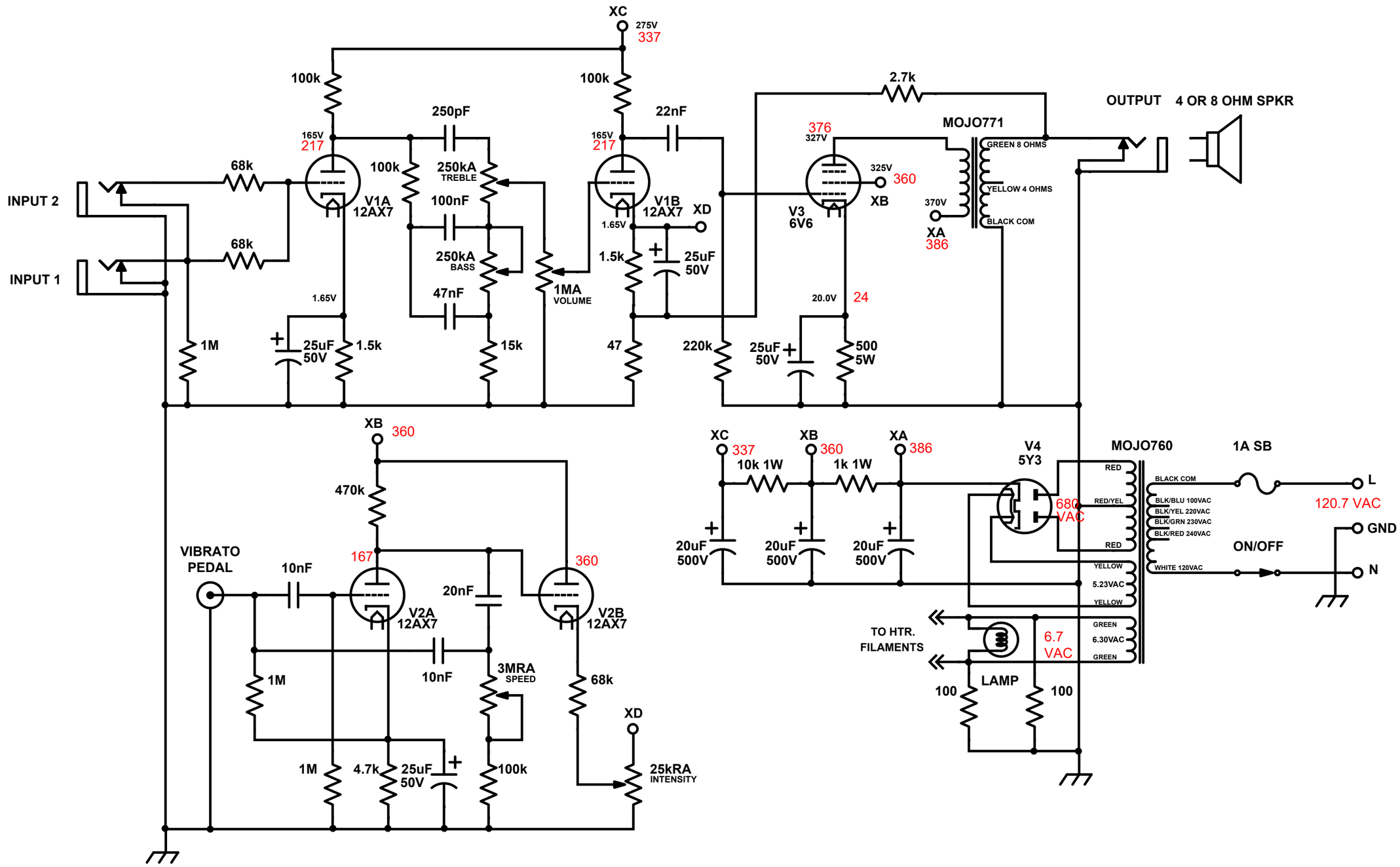

All resistors are rated for 1/2W unless specified.
All capacitors are rated for 600V unless specified.
All DC voltages were measured with respect to chassis ground.

MOJO TONE

VIBRO-CHAMP
REVISION 1
6/22/2021