MEDALIST **PREAMP**

Gibson

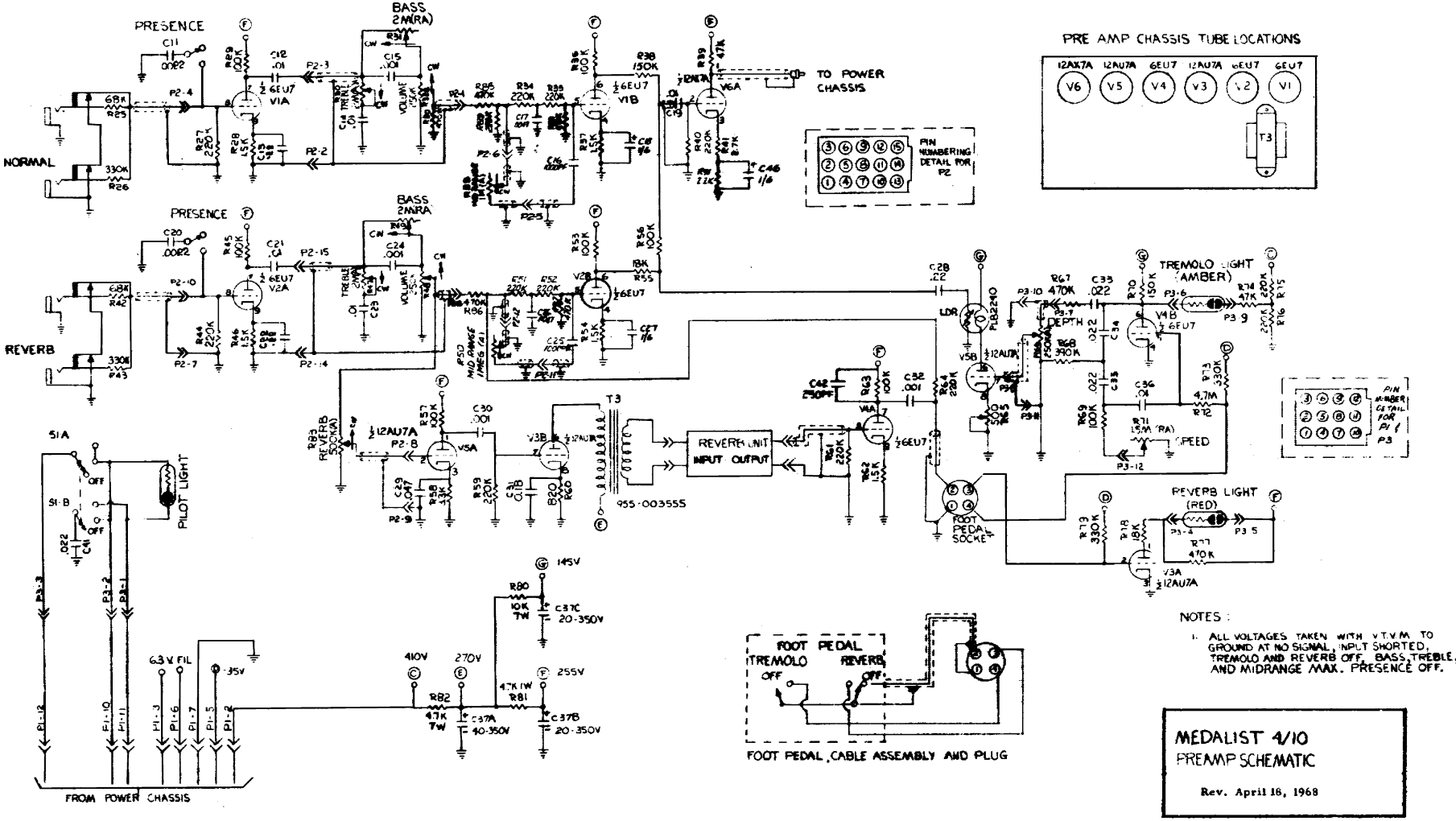

NOTES :

1. ALL VOLTAGES TAKEN WITH V.T.V.M. TO GROUND AT NO SIGNAL, INPUT SHORTED, TREMOLO AND REVERB OFF, BASS, TREBLE, AND MIDRANGE MAX. PRESENCE OFF.

MEDALIST 4/10
PREAMP SCHEMATIC

Rev. April 18, 1968