SERVICE MANUAL

E -100 -200 -300

1965

CAUTION
SEE SAFETY NOTICE ON INSIDE COVER SHEET

HOOO-000468

HAMMOND ORGAN COMPANY
A DIVISION OF MARMON COMPANY
A MEMBER OF THE MARMON GROUP OF COMPANIES
4200 W. Diversey Avenue ° Chicago, Illinois 60639
[312] 283-2000

SAFETY NOTICE

Great care has been taken in the design and manufacture of this product to assure that no shock hazard exists on any exposed metal parts. Internal service operations can expose the technician to hazardous line voltages and accidentally cause these voltages to appear on exposed metal parts during repair or reassembly of product components. To prevent this, work on these products should only be performed by those who are thoroughly familiar with the precautions necessary when working on this type of equipment.

To protect the user, it is required that all enclosure parts and safety interlocks be restored to their original condition and the following tests be performed before returning the product to the owner after any service operation.

Plug the AC line cord directly into a line voltage AC receptacle (do not use an isolation transformer for this test) and turn the product on. Connect the network (as shown below) in series with all exposed metal parts and a known earth ground such as a water pipe or conduit. Use an AC VOM of 5,000 ohms per volt or higher sensitivity to measure the voltage drop across the network. Move the network connection to each exposed metal part (metal chassis, screw heads, knobs and control shafts, escutcheon, etc.) and measure the voltage drop across the network. Reverse the line plug and repeat the measurements. Any reading of 4 volts RMS or more is excessive and indicates a potential shock hazard which must be corrected before returning the product to the user.

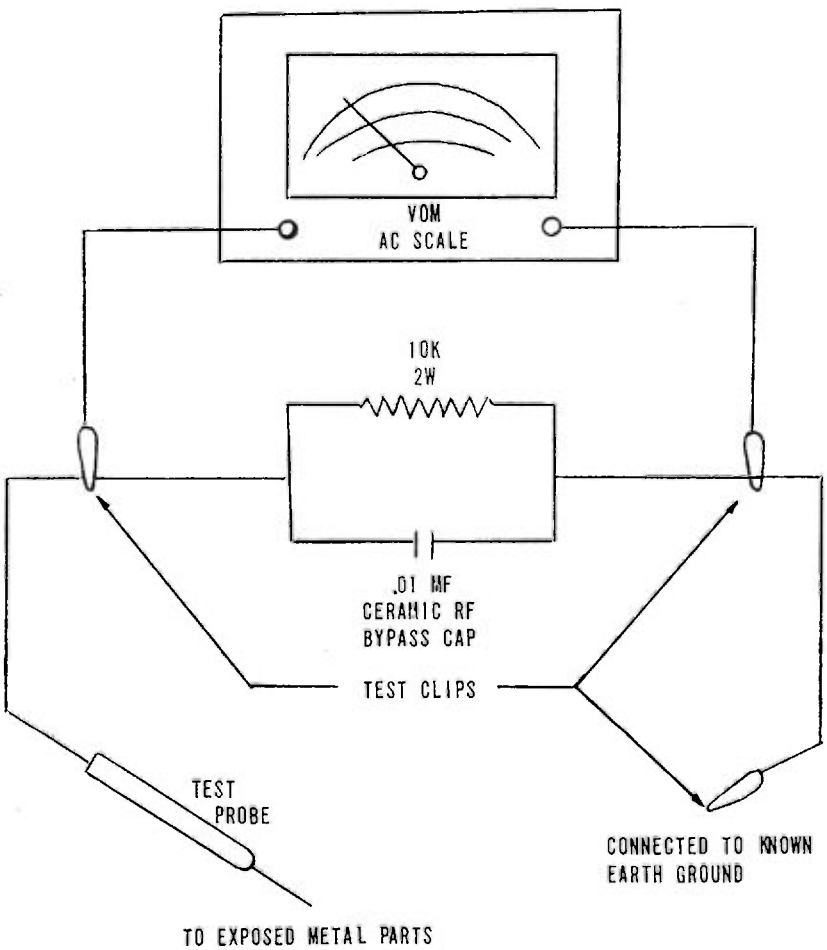

CONTENTS

	Page
Figure 1, Front view of Console – E-100	2
Figure 2, E-200 General Description	3
Figure 3, E-300 General Description	4
General Description, E-100	5
Figure 4, Back view of Console	5
Figure 5, Block Diagram	6
Installation and Maintenance	7
Musical Terms	7
Notes and Octaves	7
Harmonics or Overtones	7
Figure 6, Typical Tone Generator	7
Figure 7, Magnet Locations	8
How the Organ works	8
Figure 8, Generator Cover	9
Figure 9, Manual Wiring Chart	10
Construction and Operation of Components	11
Motor and Power Switch	11
Tone Generator	11
Manuals	12
Harmonic Drawbars	13
Pedal Keyboard	13
Pedal Drawbars	13
Pedal Switch	13
Figure 10, Pedal Keyboard	14
Expression Pedal	14
Control Tabs	14
Figure 11, Percussion-Rhythm Tabs	15
Percussion Tabs	15
Rhythm Tabs	15
Vibrato Tabs	15
Figure 12, Preset-Vibrato On Tabs, Upper and Lower Drawbars	15
Figure 13, Vibrato Variations – Reverberation and Soft Volume Tabs On/Off Switch	16
Figure 14, Vibrato Scanner	17
Preset Tabs	17
Figure 15, Vibrato System	18
Reverberation and Soft Volume	18
Amplifier Assemblies	18
Figure 16, Vibrato Line Box	19
Percussion Section	19
Percussion and Reiteration Driver	20
Harp Section	20
Cymbal and Brush Generator Assembly	21
Cymbal/Pedal	21
Brush/Lower	21
Special Equipment	21
Radio-Phonograph or Microphone	21
Figure 17, Phono-Earphone Connection	22
Extension Speaker	22
Special Power Sources	22
Practical Service Suggestions	23
Organ Does Not Play	23
One Key Does Not Play	23
One Note is Weak	24
Replacing Tubes	25
Procedure For Removing Parts	25
Broken Tab	25
Pilot Light	25
Run Switch	25
Drawbar or Drawbar Knob	25
Pedal Drawbar	26
Drawbar Assemblies	26
Upper Manual Key	26
Lower Manual Key	26
Manual Chassis	27
Generator	28
Harp Keyer Assembly	28
Harp Keyer (individual board)	28
Expression Pedal	28
Pedal Switch	29
Reiterator Chassis	30
Vibrato Scanner	29
Figure 18, Early Percussion System	30
Figure 19. Percussion System	30
Organ Adjustment Procedures	31
Figure 20, Harp Keyer Assembly	34
Figure 21, Pedal Divider Board	35
Figure 22, Brush and Cymbal Board	35
Figure 23, Click Filter	36
Reprint of Technical Bulletins	37-38-39-40
Figure 24, Control Panel Wiring Diagram (Early)	41
Figure 25, Control Panel Wiring Diagram	42
Figure 26, Console Wiring Diagram (Early)	43
Figure 27, Console Wiring Diagram	44
Figure 28, Console Schematic Diagram (Early)	**45A/45B**
Figure 29, Console Schematic Diagram (Revised)	**46A/46B**
Figure 30, Console Schematic Diagram	**47A/47B**
Figure 31, E-200 Control Panel Wiring Diagram	49
Figure 32, E-200 Console Wiring Diagram	50
Figure 33, E-200 Schematic Diagram (Early)	**51A/51B**
Figure 34, E-200 Schematic Diagram	**52A/52B**
Figure 35, E-300 Control Panel Wiring Diagram	53
Figure 36, E-300 Console Wiring Diagram	54
Figure 37, E-300 Console Schematic Diagram (Early)	**55A/55B**
Figure 38, E-300 Console Schematic Diagram	**56A/56B**

ALL APPLICABLE TECHNICAL BULLETINS TO DECEMBER 1968 ARE INCLUDED IN THIS MANUAL

FIGURE 1. TYPICAL E-100 SERIES INSTRUMENT

DIMENSIONS:	48" Wide, 26" Deep and 48" High with Music Rack
WEIGHT:	410 Lbs. with Pedals and Bench
INPUT:	117 Volts 60 Cycle A. C. - 220 Watts
POWER OUTPUT:	50 Watts E. I. A.

FIGURE 2. TYPICAL E-200 SERIES INSTRUMENT

DIMENSIONS: 47" Wide, 25-1/2" Deep and 50-1/2" High with Music Rack
WEIGHT: 435 Lbs. with Bench and Pedals
INPUT: 117 Volts 60 Cycle A.C. 250 Watts
POWER OUTPUT: 50 Watts E.I.A.

The E-200 Series is an Institutional model with a locking roll top console cover and a built in Music Rack Light. It is basically the same as the E-100 Series, except the Manual Presets are "Liturgical", the foot controlled "Vibrato Cancel" switch has been omitted as have the "Percussive Presets" with the exception of "CHIMES", "HARP SUSTAIN" and "ADD VIBRATO".

For service use, refer to Figure 31 Page 49 Control Panel Wiring Diagram, Figure 32 Page 50 Console Wiring Diagram and Figure 33 & 34 Page 51 & 52 Console Schematic.

FIGURE 3. TYPICAL E-300 SERIES INSTRUMENT

DIMENSIONS:	48" Wide, 26" Deep and 48" High with Music Rack
WEIGHT:	405 Lbs. with Pedal and Bench
INPUT:	117 Volts 60 Cycle 220 Watts
POWER OUTPUT:	50 Watts E. I. A.

The E-200 Series is basically the same as the E-100 Series, except "CYMBAL/ BRUSH" and "HARP SUSTAIN" are not available in this series. A "CELESTA" tab is provided on the E-300 Series but not on the E-100 Series.

For service use, refer to Figure 35 Page 53 Control Panel Wiring Diagram, Figure 36 Page 54 Console Wiring Diagram and Figure 37 & 38 Page 55 & 56 Console Schematic.

GENERAL DESCRIPTION

E-100 SERIES

The Hammond E-100 series organ is a completely self-contained console, requiring no external tone cabinet. It has two manuals or keyboards of 61 keys each, a 25 note pedal keyboard, and an expression (or swell) pedal for controlling the volume. All tones are produced by electro-magnetic tone generators and electrically amplified, as in other models of the Hammond Organ. Selection of tone colors is made by adjusting 20 drawbars and 8 preset tabs. Other characteristics of the music are adjusted by means of 19 other tabs. A switch on the swell pedal, operated by moving the foot to the left, turns off any vibrato effect set up on the tabs. The effect reappears when the foot is moved to the right. A toggle switch located to the right of the console above the manuals is used to turn on the organ. A pilot light shows when the organ is turn on.

Figure 1 shows the front of the console and Figure 4 is a rear view, with the back removed.

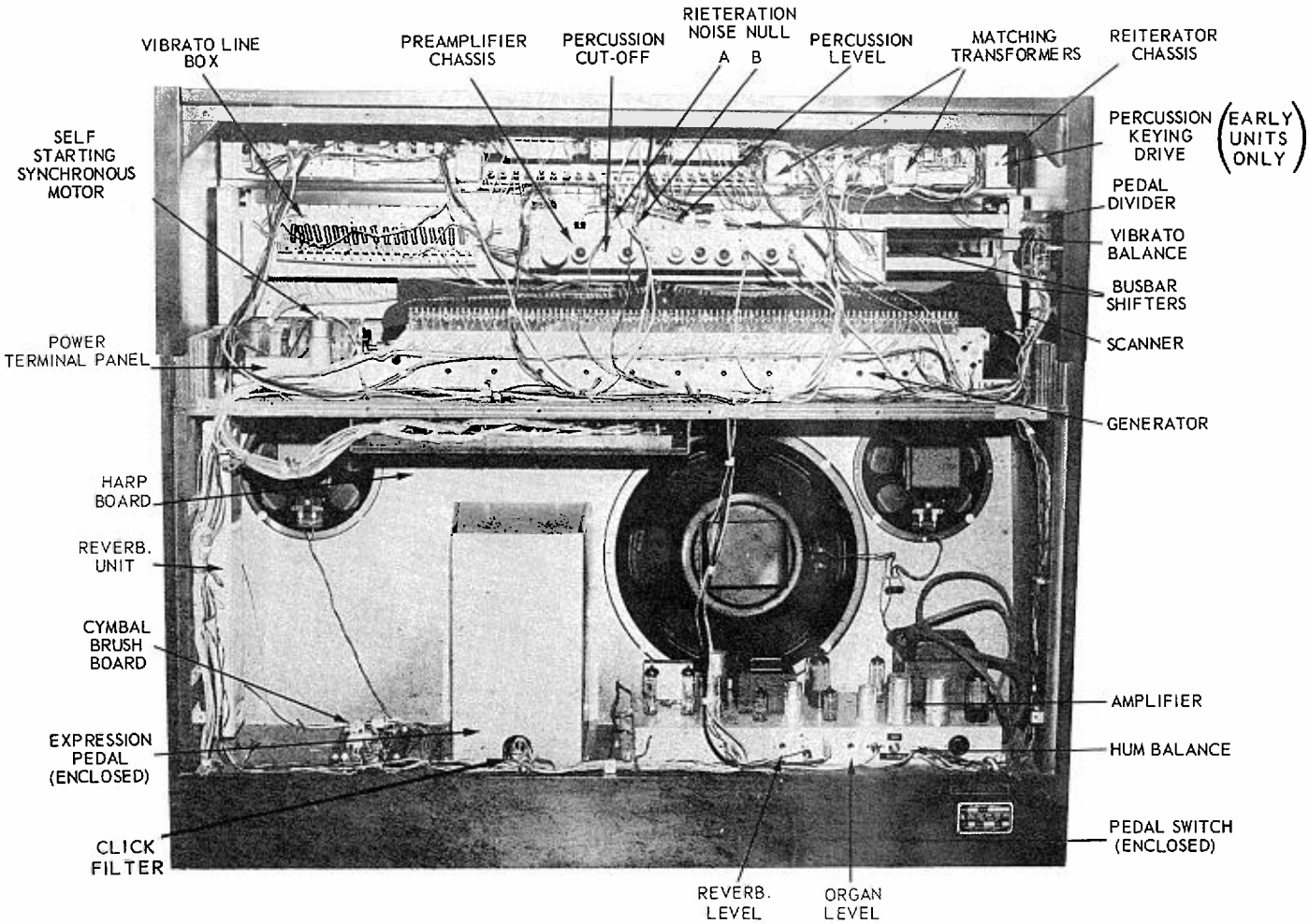

FIGURE 4. BACK VIEW OF CONSOLE REAR COVER REMOVED

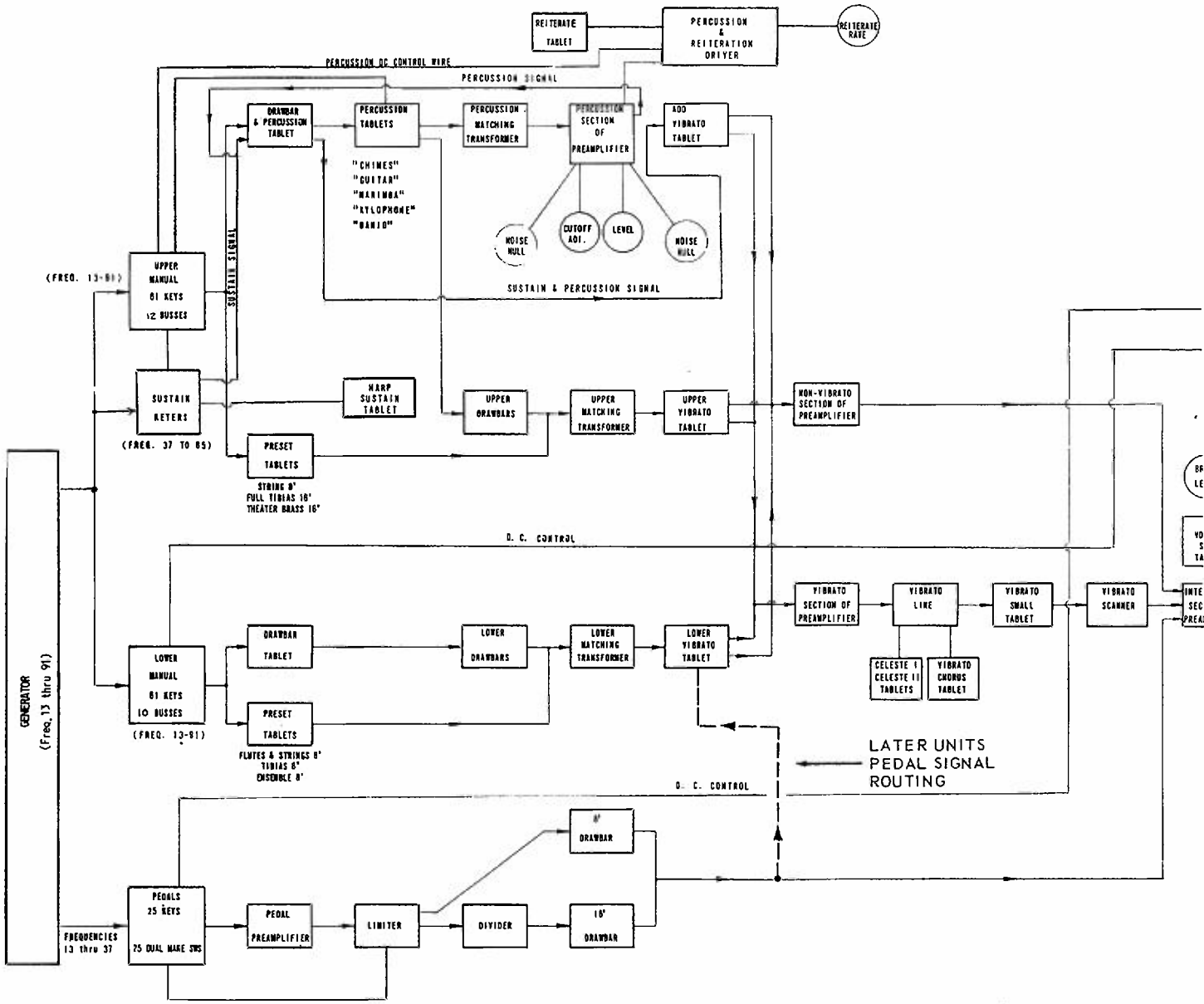

FIGURE 5. BLOCK DIAGRAM E-100 SERIES

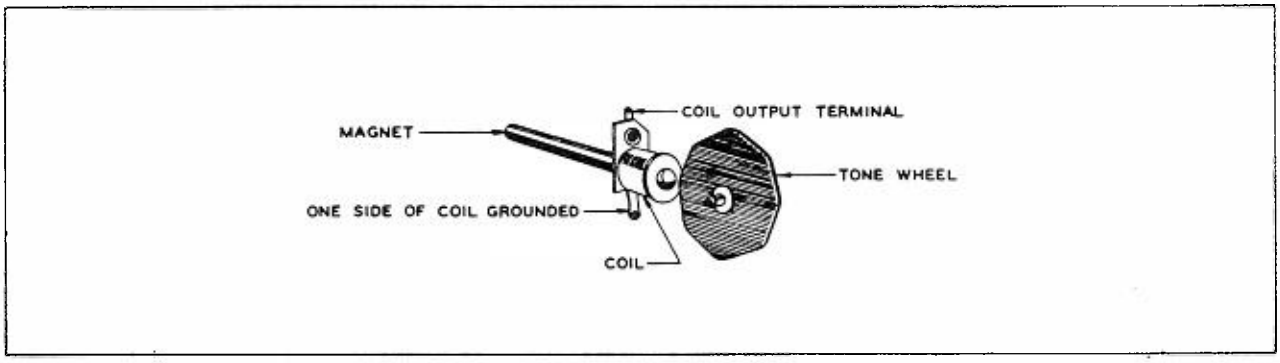

FIGURE 6. TYPICAL TONE GENERATOR

INSTALLATION AND MAINTENANCE

A card packed with the playing instructions gives full information on installing the organ, oiling, and packing for moving or shipment. After reading this card, the owner may wish to attach it to the underside of the organ bench top for further reference.

MUSICAL TERMS

Service personnel and others who have had no musical training will find the following information helpful in studying the operation of the organ.

NOTES AND OCTAVES

Keyboard instruments are divided into "octaves" of 12 keys or notes, each with 7 "naturals" (white keys) and 5 "sharps" or "flats" (black keys) in a definite sequence. Black keys occur in groups of two and three in each octave and offer a convenient way to identify the notes of the octave. Technically there is no difference between a black key and a white one, since each key has a frequency 1.059 times the frequency of the next one below it.

Each note has a frequency exactly one half that of the corresponding note in the next higher octave. Each white key is called by a letter from A to G and these letters are known as "notes of the musical scale." A black key may be called a "sharp" of the note below it or a "flat" of the note above it; for instance, the black key between C and D may properly be called C# (C sharp) or D^b (D flat).

HARMONICS OR OVERTONES

Any musical note has a definite fundamental pitch or frequency and also a certain "tone quality" or "timbre" depending on its wave shape. A complex note is one which includes not only a fundamental frequency but also one or more "harmonics" or "overtones", each of which is an integral multiple of the fundamental frequency. Such a combination is more pleasing musically than a note having only a single frequency. The ear does not distinguish the harmonics independently, but instead identifies the note as a complex tone having the pitch of the lowest component, or fundamental.

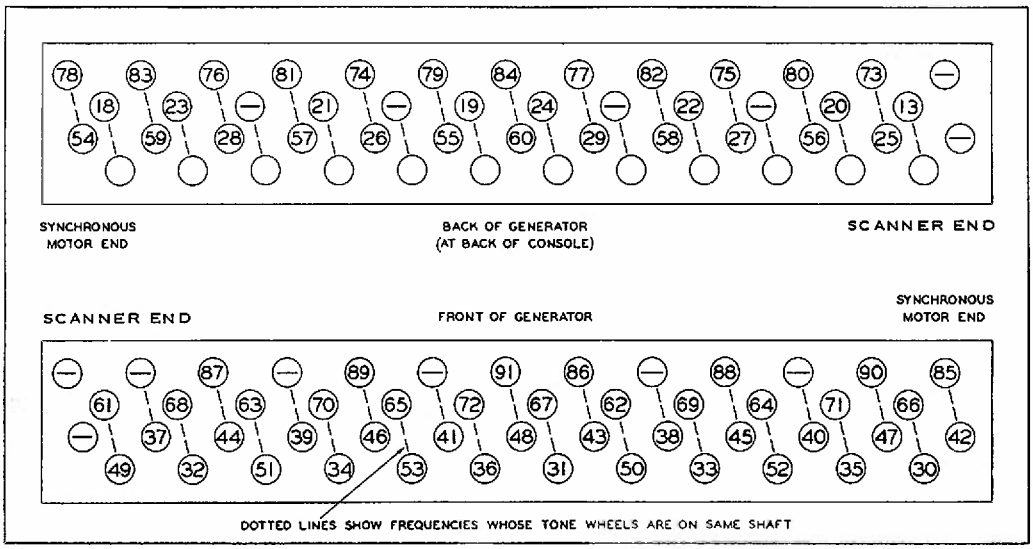

FIGURE 7. MAGNET LOCATION ON TONE GENERATOR

HOW THE ORGAN WORKS

Most tone sources, such as strings, reeds, or pipes, produce complex tones. The Hammond tone-producing mechanism, however, generates individual frequencies which can be combined by means of harmonic drawbars to produce any desired tone quality. The block diagram, figure 5, shows the chief components of the instrument.

Electrical impulses of various frequencies are produced in the "tone generator assembly" which contains a number of "tone wheels" driven at predetermined speeds by a motor and gear arrangement. Each tone wheel is a steel disc similar to a gear, with high and low spots, or teeth, on its edge (see figure 6). As the wheel rotates, these teeth pass near a permanent magnet, and the resulting variations in the magnetic field induce a voltage in a coil wound on the magnet. This small voltage, when suitably filtered, produces one note of the musical scale, its pitch or frequency depending on the number of teeth passing the magnet each second.

A note played on either manual of the organ consists of a fundamental pitch and a number of harmonics, or multiples of the fundamental frequency. The fundamental and harmonics available on each playing key are controlled by means of drawbars. By suitable adjustment of these controls the player may vary the tone colors at will. Pre-selected tones and other special effects are made available by use of the tabs.

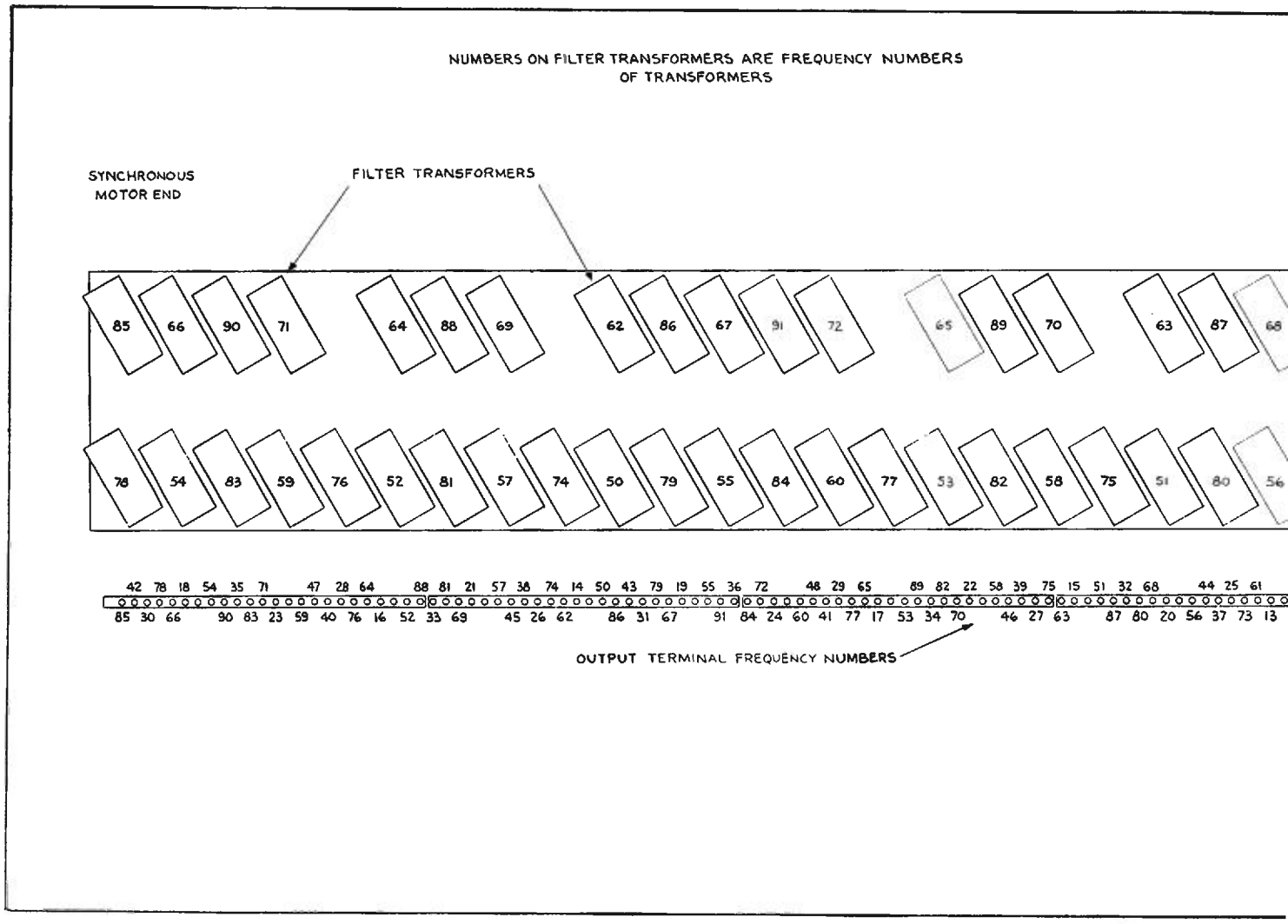

FIGURE 8. MAIN GENERATOR COVER

Key Number	Note	Drawbar 1 Sub-Fund.	Drawbar 2 Sub-3rd	Drawbar 3 Fund.	1¼ Harm Upper Chime only	Drawbar 4 2nd Harm.	Drawbar 5 3rd Harm.	Drawbar 6 4th Harm.	Drawbar 7 5th Harm.	Drawbar 8 6th Harm.	Drawbar 9 8th Harm.
1	C	13	20	13	17	25	32	37	41	44	49
2	C#	14	21	14	18	26	33	38	42	45	50
3	D	15	22	15	19	27	34	39	43	46	51
4	D#	16	23	16	20	28	35	40	44	47	52
5	E	17	24	17	21	29	36	41	45	48	53
6	F	18	25	18	22	30	37	42	46	49	54
7	F#	19	26	19	23	31	38	43	47	50	55
8	G	20	27	20	24	32	39	44	48	51	56
9	G#	21	28	21	25	33	40	45	49	52	57
10	A	22	29	22	26	34	41	46	50	53	58
11	A#	23	30	23	27	35	42	47	51	54	59
12	B	24	31	24	28	36	43	48	52	55	60
13	C	13	32	25	29	37	44	49	53	56	61
14	C#	14	33	26	30	38	45	50	54	57	62
15	D	15	34	27	31	39	46	51	55	58	63
16	D#	16	35	28	32	40	47	52	56	59	64
17	E	17	36	29	33	41	48	53	57	60	65
18	F	18	37	30	34	42	49	54	58	61	66
19	F#	19	38	31	35	43	50	55	59	62	67
20	G	20	39	32	36	44	51	56	60	63	68
21	G#	21	40	33	37	45	52	57	61	64	69
22	A	22	41	34	38	46	53	58	62	65	70
23	A#	23	42	35	39	47	54	59	63	66	71
24	B	24	43	36	40	48	55	60	64	67	72
25	C	25	44	37	41	49	56	61	65	68	73
26	C#	26	45	38	42	50	57	62	66	69	74
27	D	27	46	39	43	51	58	63	67	70	75
28	D#	28	47	40	44	52	59	64	68	71	76
29	E	29	48	41	45	53	60	65	69	72	77
30	F	30	49	42	46	54	61	66	70	73	78
31	F#	31	50	43	47	55	62	67	71	74	79
32	G	32	51	44	48	56	63	68	72	75	80
33	G#	33	52	45	49	57	64	69	73	76	81
34	A	34	53	46	50	58	65	70	74	77	82
35	A#	35	54	47	51	59	66	71	75	78	83
36	B	36	55	48	52	60	67	72	76	79	84
37	C	37	56	49	53	61	68	73	77	80	85
38	C##	38	57	50	54	62	69	74	78	81	86
39	D	39	58	51	55	63	70	75	79	82	87
40	D#	40	59	52	56	64	71	76	80	83	88
41	E	41	60	53	57	65	72	77	81	84	89
42	F	42	61	54	58	66	73	78	82	85	90
43	F#	43	62	55	59	67	74	79	83	86	91
44	G	44	63	56	60	68	75	80	84	87	80
45	G#	45	64	57	61	69	76	81	85	88	81
46	A	46	65	58	62	70	77	82	86	89	82
47	A#	47	66	59	63	71	78	83	87	90	83
48	B	48	67	60	64	72	79	84	88	91	84
49	C	49	68	61	65	73	80	85	89	80	85
50	C#	50	69	62	66	74	81	86	90	81	86
51	D	51	70	63	67	75	82	87	91	82	87
52	D#	52	71	64	68	76	83	88	80	83	88
53	E	53	72	65	69	77	84	89	81	84	89
54	F	54	73	66	70	78	85	90	82	85	90
55	F#	55	74	67	71	79	86	91	83	86	91
56	G	56	75	68	72	80	87	80	84	87	80
57	G#	57	76	69	73	81	88	81	85	88	81
58	A	58	77	70	74	82	89	82	86	89	82
59	A#	59	78	71	75	83	90	83	87	90	83
60	B	60	79	72	76	84	91	84	88	91	84
61	C	61	80	73	77	85	80	85	89	80	85
		Frequency Number									

FREQUENCIES USED IN MANUALS

FIGURE 9. FREQUENCIES USED IN MANUALS

CONSTRUCTION AND OPERATION OF COMPONENTS

In studying this section, refer to the schematic circuit of the entire organ, figure 30. Connections between components are shown in the wiring diagram, figure 27, and the control assembly wiring figure 25.

MOTOR AND POWER SWITCH

The tone generator assembly, in which all tones of the organ originate, is driven at constant speed by a self starting synchronous motor, operating at 1800 RPM, located at the left side as you look in at the back of the console (figure 4). (In 50 cycle organs, the generator speed is 1500 RPM.)

To turn on the organ lift the switch to "ON" position. To turn off the organ, push the switch downward to its "OFF" position.

TONE GENERATOR

All tones of the organ except CYMBAL and BRUSH EFFECT originate as electrical signals in the tone generator assembly. It contains 79 tone wheels having various numbers of teeth, with suitable gears for driving them at various speeds from a main shaft extending along the center. Each pair of tone wheels is mounted on a shaft and between them is a bakelite gear held between two coil springs, forming a mechanical vibration filter. As the gear is not rigidly attached to the shaft, any pair of wheels which may be stopped accidentally will not interfere with the operation of the others.

Adjacent to each tone wheel is a magnetized rod with a pick-up coil wound on it. These magnets extend through the front and back of the generator, and are held by set screws which can be loosened in case adjustment is ever necessary. Figure 7 shows where to find the magnet for any frequency number. In this drawing the dotted lines indicate frequencies whose tone wheels are on the same shaft.

Mixed tones from either the upper manual or the lower manual may go through either the "vibrato" portion or the "no vibrato" portion of the pre-amplifier, depending on the position of the corresponding "Vibrato" tabs. The tones are then combined and pass through the expression control and additional stages of amplification before reaching the speakers.

A Cymbal effect is available through the pedals with the "CYMBAL PEDAL" tab depressed, while a Brush effect on the lower manual is available by depressing the "BRUSH LOWER" tab.

Both of these effects are introduced into the overall signal or music at the power amplifier input.

Percussion tones are produced by combining the required harmonics for each tone. This is performed by the percussion tabs. Percussion tones are available on the upper manual only and can be combined with drawbar settings when the Drawbar Percussion tab is depressed.

The pedal tones are produced by tone wheels 13 through 37 and are available in 8' and 16' pitches.

On top of the tone generator assembly are small transformers and condensers, forming tuned filters for the higher frequencies. They are not likely to need replacing. In case one filter becomes inoperative, both the transformer and condenser must be replaced with a matched set from the factory. Figure 8 shows the location of these filters.

The output frequencies of the tone generator are numbered, for convenience, in order of increasing frequency. The lowest, number 13, is about 64 cycles per second, and the highest, number 91, is about 6000 cycles per second. Figure 8 shows typical tuned and untuned tone generators.

In case any generator frequency is weak or absent, refer to "Practical Service Suggestions" for the procedure to be used in locating and correcting the trouble.

The output terminals of the generator consist of solder lugs mounted on the back of the generator, to which the manual cable, pedal cable, and harp signal cable are connected. The frequency numbers of all terminals are indicated in figure 8.

MANUALS

Musical frequencies from the tone generator go through the manual cable to terminal strips on the two manuals and from them to the key contact springs.

Each of the two manuals has 61 playing keys, or 5 octaves. The two manuals cover exactly the same pitch range.

Under each key are a number of contact springs (for the fundamental and harmonics of that key) which touch an equal number of busbars when the key is pressed. All contact springs and busbars have precious metal contact surfaces to avoid corrosion, and the manuals are sealed to exclude dust so far as possible. In case a contact becomes dirty in spite of these precautions, a busbar shifter is provided in each manual to slide the busbars endwise and thus provide a fresh contact surface.

The upper manual assembly has 12 contact springs under each key. Ten are used for the fundamental tone and nine harmonics. The additional two contacts are used for producing the Harp tone and percussion. The harp effect is however available on 4 octaves only (keys C-2 through C-6)

The lower manual assembly has 10 contact springs under each key. Nine are used for the fundamental and eight harmonics. The remaining contact is used for obtaining the Brush effect.

The busbar shifting mechanism is somewhat different than on prior models of the Hammond Organ.

The back view, Figure 4, shows the location of the busbar shifters. They appear as small metal tabs with a punched hole, one for each manual. They are easily reached from the rear of the instrument and moved in and out providing a new surface for the key contacts.

The key contacts are connected through resistance wires to the manual terminal strips. The manual wiring chart, figure 9, shows how the contacts of each key are connected to the proper frequencies to supply the fundamental and harmonics of that particular key.

The busbars of each manual, each one carrying a certain harmonic, are wired to the harmonic drawbars for that manual through the "Drawbars" tab.

HARMONIC DRAWBARS

The left group of nine harmonic drawbars (figure 12) is associated with the upper manual, and the right group of nine drawbars controls the lower manual. By sliding these drawbars in and out, the organist is able to mix the fundamental and harmonics (or overtones) in various proportions. The distance a bar is pulled out determines the strength of the corresponding harmonic; and if a drawbar is set all the way in, the harmonic it represents is not present in the mixture. Neither manual will play unless at least one of its drawbars is pulled out at least part of the way, with the "Drawbars" tab pressed, or a preset tab is pressed.

The drawbars slide over 17 busbars, representing intensity levels. As the drawbar moves, its contact is touching some busbar at all times, and therefore there is a smooth change in volume of that harmonic.

The busbars for the upper and lower manuals terminate in low impedance primaries of the two matching transformers. Signals from the high impedance secondaries of these two transformers go through the "ON upper" and "ON lower" switches to either vibrato or non-vibrato sections of the pre-amplifier.

PEDAL KEYBOARD

A standard 25 note pedal keyboard is supplied with the instrument. Like the manuals, it has black and white keys arranged in standard octave patterns. Figure 10 identifies the pedals.

The pedals are attached by placing the switch pusher end towards the pedal switch and lifting while pushing gently towards the switch.

PEDAL DRAWBARS

In the pedals the harmonic resources have been combined into two drawbars which may be used separately or in combinations. When the left drawbar is used emphasis is given to the lower harmonics, and similarly the higher harmonics are emphasized when the right drawbar is used. The pedal drawbars are located between the two sets of manual drawbars.

PEDAL SWITCH

The Pedal Switch which is actuated by the pedal keyboard consists of 25 leaf switches, each having two sets of contacts.

One set of contacts receive frequencies 13 through 37 from the generator. The output of these contacts is fed to the Pedal Pre-Amplifier. Just after the Signal Switch closes, the second set of contacts closes supplying collector voltage to the third stage of the Pedal Amplifier. With a pedal held down, an 8 foot signal appears at the 8' drawbar and the pedal limiter, the signal from the limiter is then routed through the pedal divider producing a 16' signal at the 16' drawbar. The circuit arrangement of the output is such, that the 8' has some 16' background and the 16' has some 8' background. The signal leaving the drawbars is then routed to the input of the intermediate section of the pre-amplifier.

An additional function of the second set of contacts is, to supply a keying voltage for the cymbal circuit when the "Cymbal Pedal" tab is depressed.

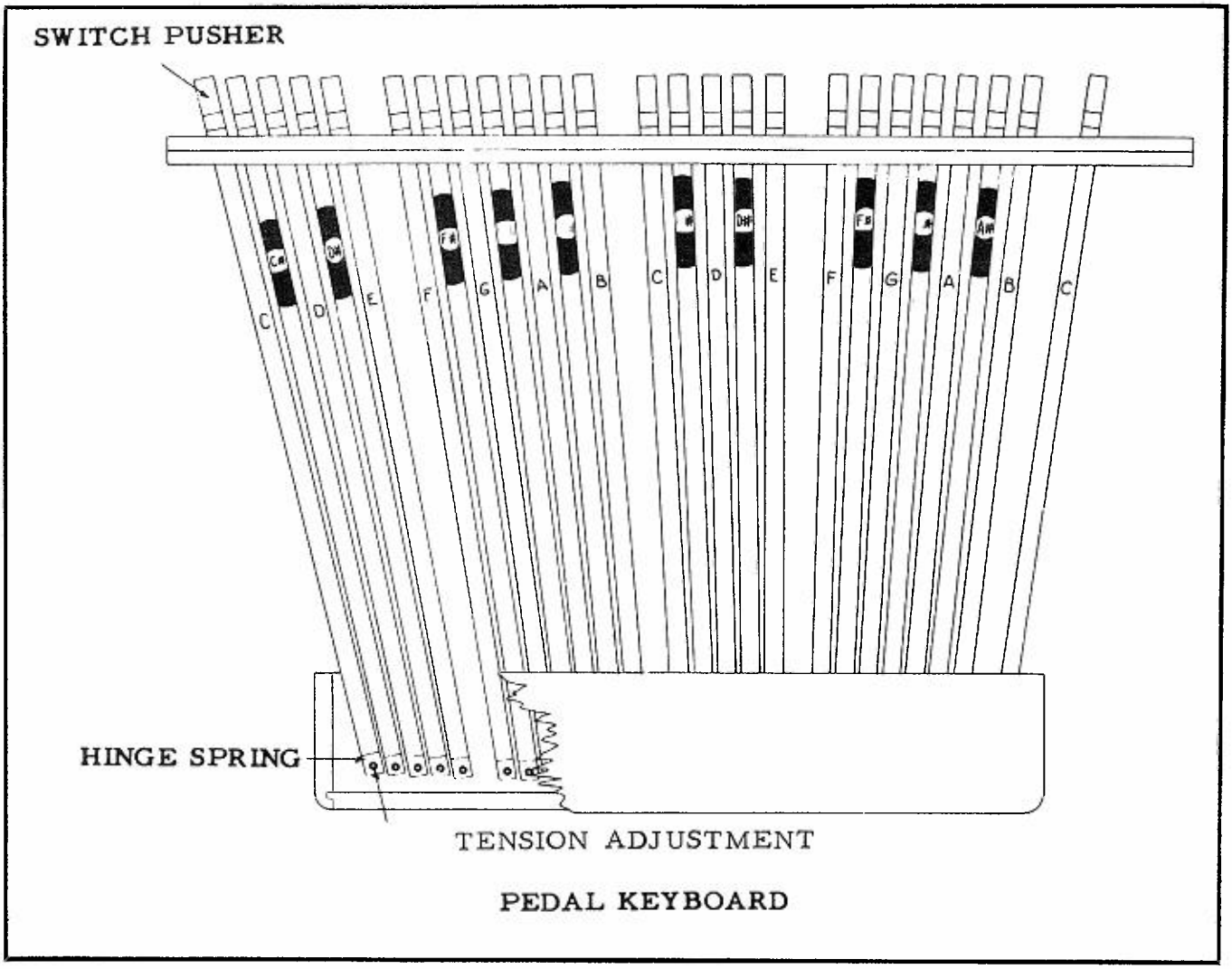

FIGURE 10.

EXPRESSION PEDAL

The expression pedal, sometimes referred to as "Swell Pedal" (figure 1) is usually operated by the player's right foot to vary the volume of the instrument.

The volume is controlled by a light source and two photocells with a variable shutter connected to the pedal. The amount of light reaching the photocells is determined by the position of the shutter. Maximum light produces minimum resistance in the photocell, therefore minimum volume.

One photocell controls the volume of the organ section and the other photocell controls the volume of the Cymbal and Brush effects.

CONTROL TABS

There are 27 tabs on the E-100 Series Instrument, each providing some change in the Instrument's Operation.

To have the instrument sound after turning it on, tabs such as "theater brass 16'" and "Ensemble 8'" will place the Upper and Lower manuals in operation. A tab is in use when in the down position. Functions of the various tabs from left to right as they appear on the instrument are given in the following paragraphs.

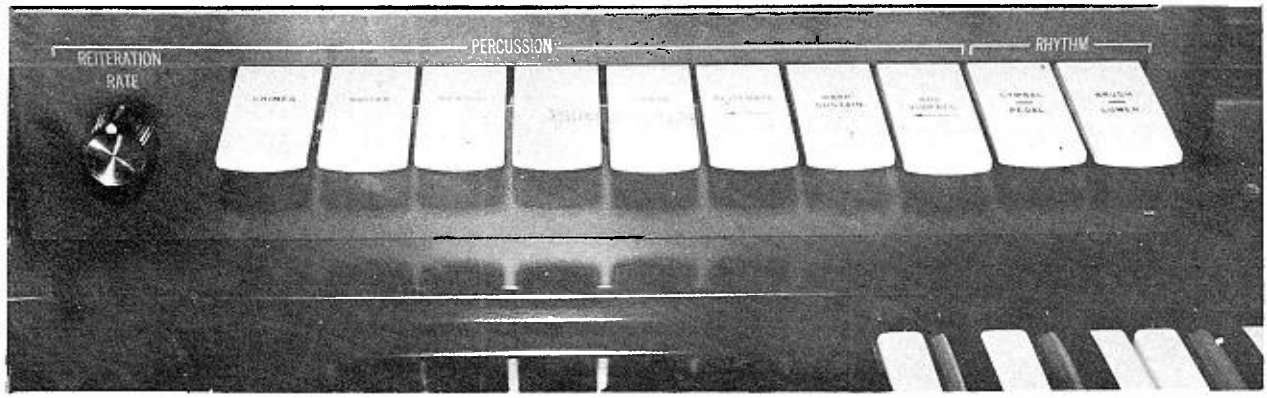

FIGURE 11. PERCUSSION-RHYTHM EFFECTS TABS

PERCUSSION TABS

There are 8 of these tabs plus a "Reiteration Rate" control. The first 5 and the 7th tabs are percussive presets, each creating the effect associated with the instrument indicated on the individual tab. The 6th tab when depressed, keys the "Reiterator Circuit" (repeat percussion) and its rate is controlled by the "Reiteration Rate Control." The 8th tab, when depressed, adds vibrato to the percussive circuits. In order for any of the above circuits to operate; the "Drawbar & Percussion" tab in the "Upper Preset" group must be depressed. Operation of the electrical circuits associated with these features is described in subsequent paragraphs.

RHYTHM TABS

There are 2 tabs in this group. The "Cymbal Pedal" tab, when depressed, introduces a cymbal effect to the foot pedals in addition to the tones selected by the pedal drawbars. The "Brush Lower" tab introduces a brush effect to the lower manual in addition to any other tones selected by drawbars or preset tabs. On later models an over all level control for these effects is located behind the Reiteration Rate Control.

VIBRATO TABS

The E-100 series organs are equipped with selective vibrato using four tabs to vary the vibrato effect. Two additional tabs located between the manual preset tabs permit any vibrato effect to be added or cancelled immediately. Several degrees of vibrato are available using "Vibrato Small" and "Vibrato Celeste I and II." The latter two are additive when both stops are used. "Vibrato Chorus" can be used with normal or "Vibrato Small" for an additional effect.

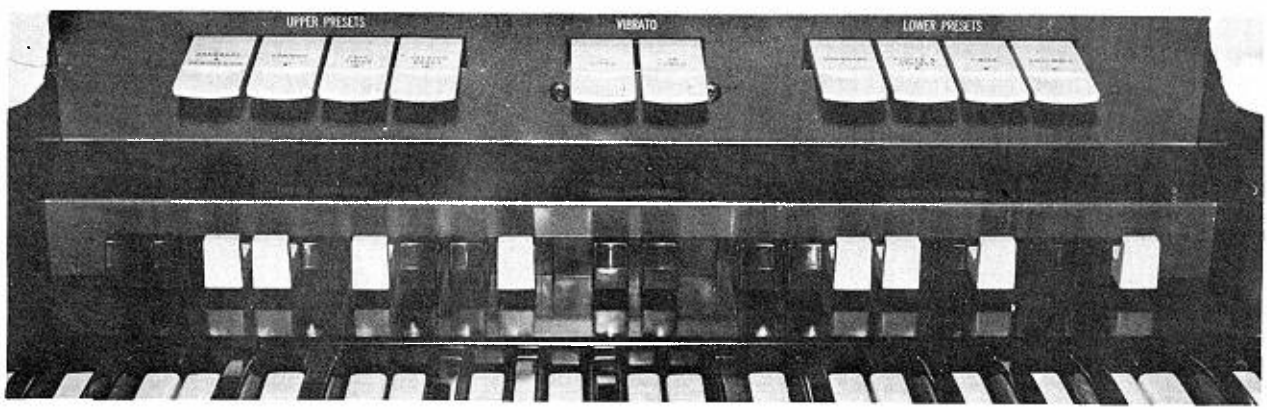

FIGURE 12. DRAWBARS PRESET AND VIBRATO TABS

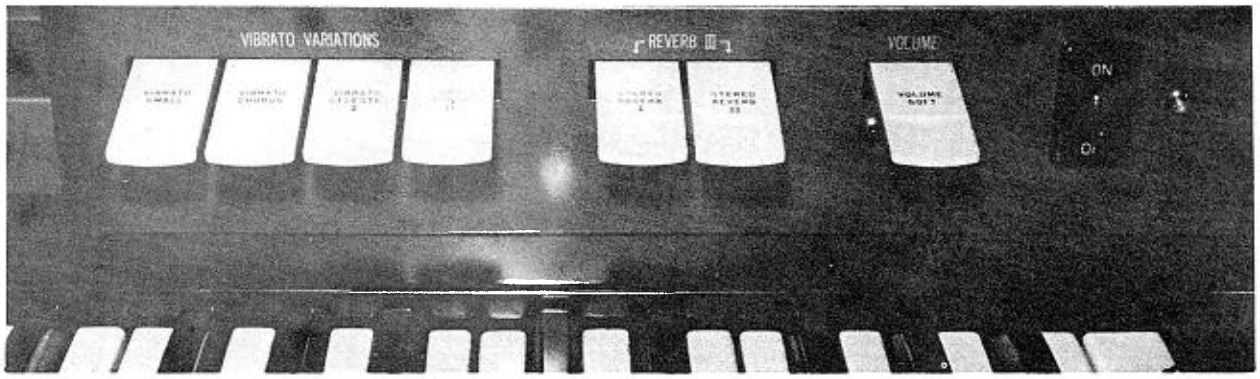

FIGURE 13. VIBRATO - REVERB. AND SOFT VOLUME TABS

In addition there is a spring loaded, "Vibrato Cancel" Switch on the Expression Pedal which when operated immediately cancels all vibrato effects. The vibrato effect is created by a periodic raising and lowering of pitch, and thus is fundamentally different from a tremolo, or loudness variation. It is comparable to the effect produced when a violinist moves his finger back and forth on a string while playing, varying the frequency while maintaining constant volume.

The Hammond Organ vibrato equipment (see Fundamental Diagram of Vibrato System, figure 15) varies the frequency of all tones (excepting the pedal tones on early units) by continuously shifting their phase. It includes a phase shift network or electrical time delay line, composed of a number of low pass filter sections, and a capacity type pickup or scanner, which is motor driven so that it scans back and forth along the line.

Electrical waves fed into the line are shifted in phase by each line section (the amount per section being proportional to frequency), so that at any tap of the line the phase is retarded relative to the previous tap.

The scanning pickup traveling along the line will thus encounter waves increasingly retarded in phase at each successive tap. As a shift in phase is equivalent to an instantaneous change in frequency, the continuous change in phase becomes a continuous frequency variation. Since the scanner sweeps from start to end of the line and then back, it alternately raises and lowers the output frequency, the average remaining equal to the input frequency.

The exact amount of frequency shift depends not only on the amount of phase shift in the line but also on the scanning rate. This rate, however, is constant because the scanner is driven by the synchronous running motor of the organ.

The "Vibrato Small" tab varies the amount of frequency shift by causing two thirds of the line to be scanned, in contrast to the entire line when in the up position.

A vibrato chorus effect, similar to the effect of two or three slightly out-of-tune frequencies mixed together, is obtained when the vibrato output signal is mixed with a portion of signal without vibrato. This is accomplished by the "Vibrato Chorus" tab, which causes only part of the incoming signal to appear across the vibrato line and the rest across a resistor in series with the line. As the vibrato effect is applied to the part of the signal appearing across the line but not to the part appearing across the resistor, the combination produces a chorus effect.

A celeste effect is obtainable by the use "Vibrato Celeste I" and "Vibrato Celeste II" tabs. These can be used independently or together. Use of these tabs introduces a resistor network at the far end of the vibrato line, changing the termination impedance. This in turn causes a reflective signal to appear in the line, which is picked up by the scanner.

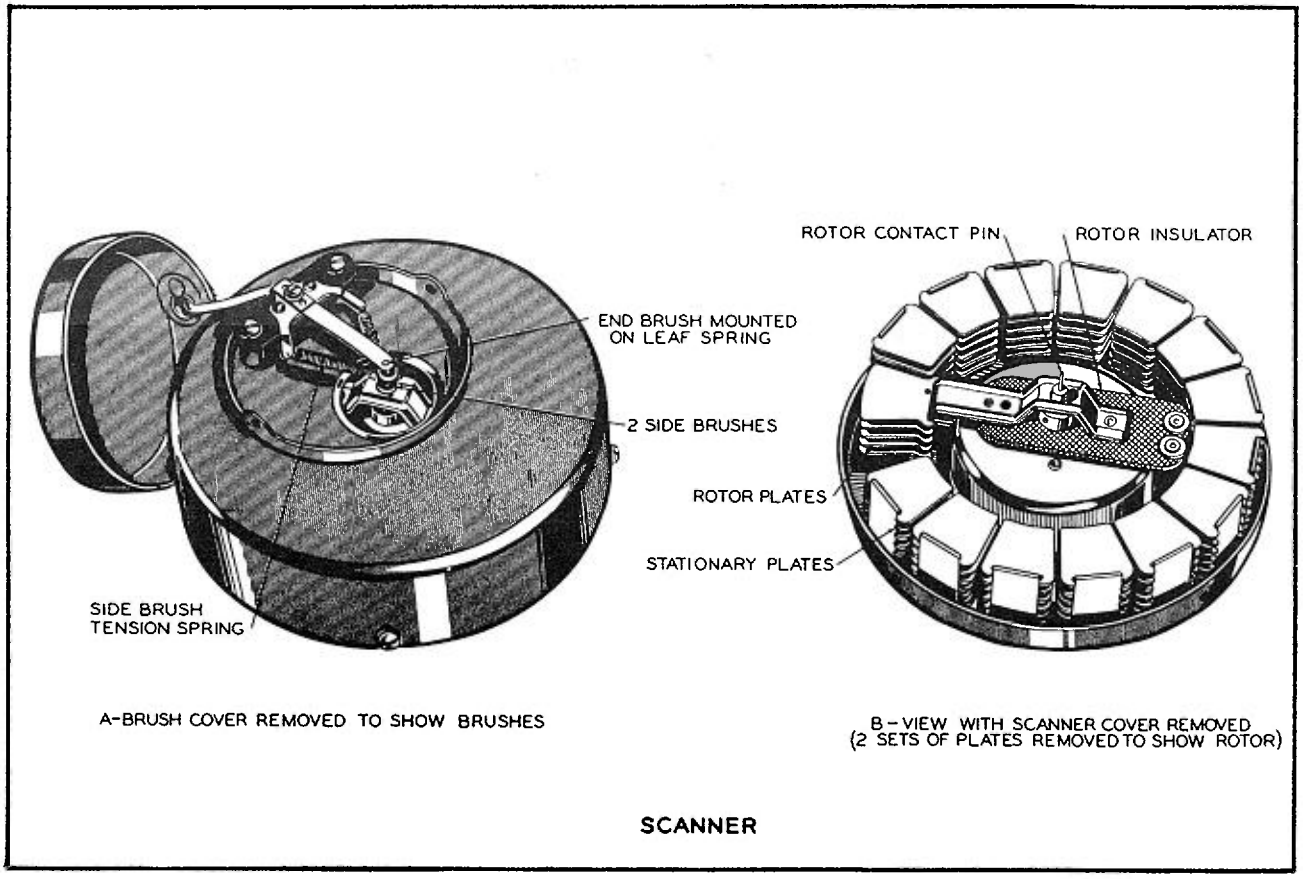

FIGURE 14. VIBRATO SCANNER

Figure 15 shows the line box and scanner associated with the "vibrato" channel of the amplifier. All tones sent through this channel have the vibrato effect. When vibrato is not desired on one manual or both, the "Vibrato Cancel" tabs in the up position feed their signals through the "no vibrato" channel of the amplifier.

Figure 16 shows the vibrato line box. It is mounted on the rear of the upper manual.

The scanner is mounted on the right end of the generator when facing the back of the organ and driven at 412 revolutions per minute. It is a multi-pole variable condenser with 16 sets of stationary plates and a rotor whose plates mesh with the stationary ones. Figure 14 shows the construction of the scanner, with two sets of plates removed to show the rotor.

Signals coming from the vibrato line appear on the stationary plates and are picked up, one at a time, by the rotor. Connection to the rotor is made by carbon brushes as shown in figure 14. Two brushes touch the sides of the contact pin and a third presses on the end, in order to eliminate the possibility of contact failure.

The complete electrical circuit of the vibrato system is shown on the schematic diagram, Figure 30.

PRESET TABS

Four tabs are provided for each manual. As indicated, they provide a choice of using the drawbars or playing the preset tones indicated on them.

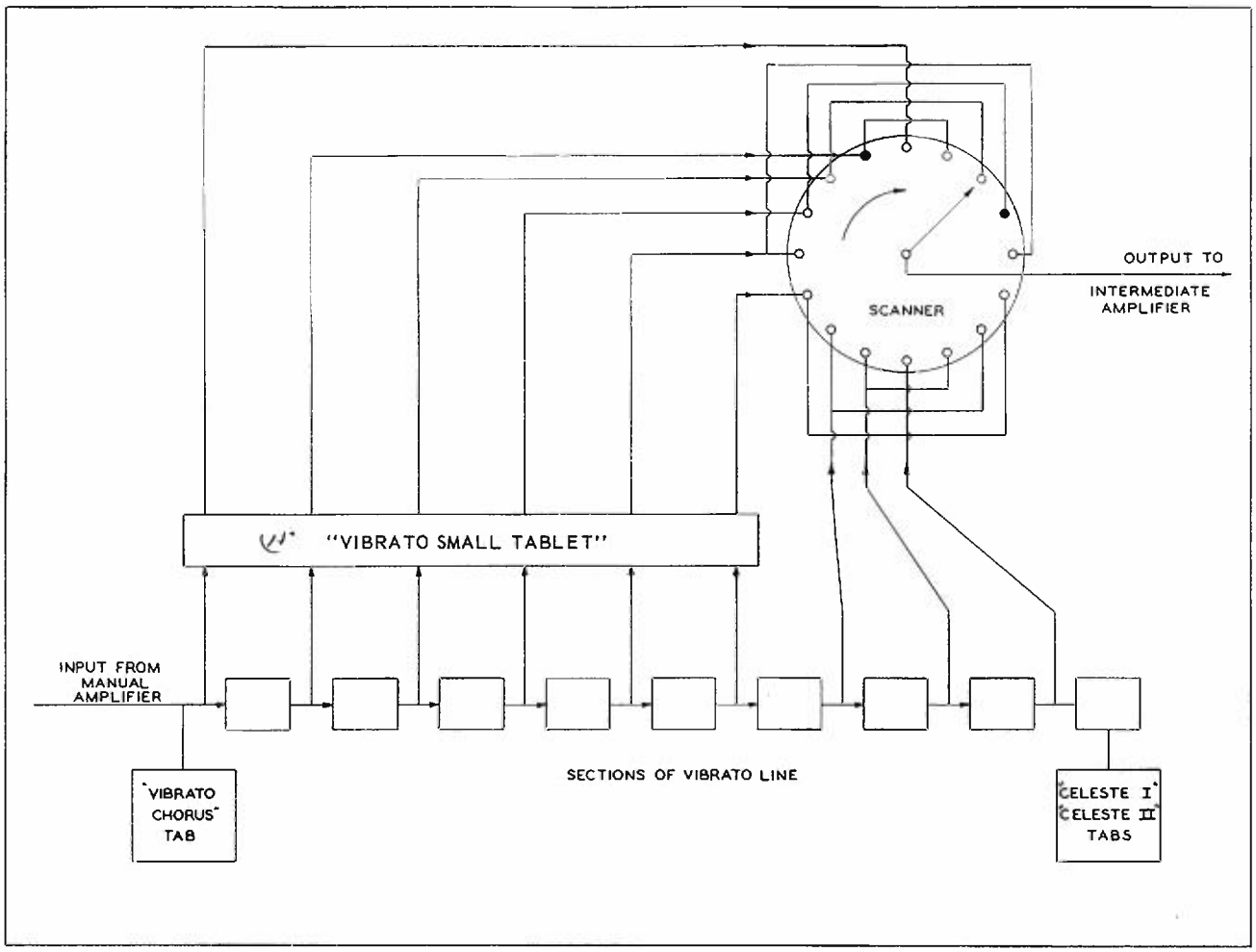

FIGURE 15.
FUNDAMENTAL DIAGRAM OF VIBRATO SYSTEM

REVERBERATION AND VOLUME SOFT TABS

Several degrees of reverberation are obtained by the use of either or both tabs labeled "Reverberation I" and "Reverberation II". These tabs in addition to turning this feature on, govern the loudness or amount of reverberation by a resistive network used in conjunction with the input circuit of the amplifier. The "Volume Soft" tab controls the overall volume of the organ and is especially useful where playing might disturb others.

AMPLIFIER ASSEMBLIES

One amplifier chassis is composed of five sections; Reverberation Pre-Amplifier and Driver, Reverberation Power Amplifier, Organ Pre-Amplifier, Power Amplifier and Power Supply, as indicated in the block diagram Figure 5. The Wiring Diagram, Figure 27 shows the location of tubes and terminals. A second amplifier chassis is composed of five sections; Manual Non Vibrato Pre-Amplifier, Manual Vibrato Pre-Amplifier and Driver, Vibrato Amplifier, Intermediate Amplifier and Percussion Amplifier. As indicated in the block diagram Figure 5.

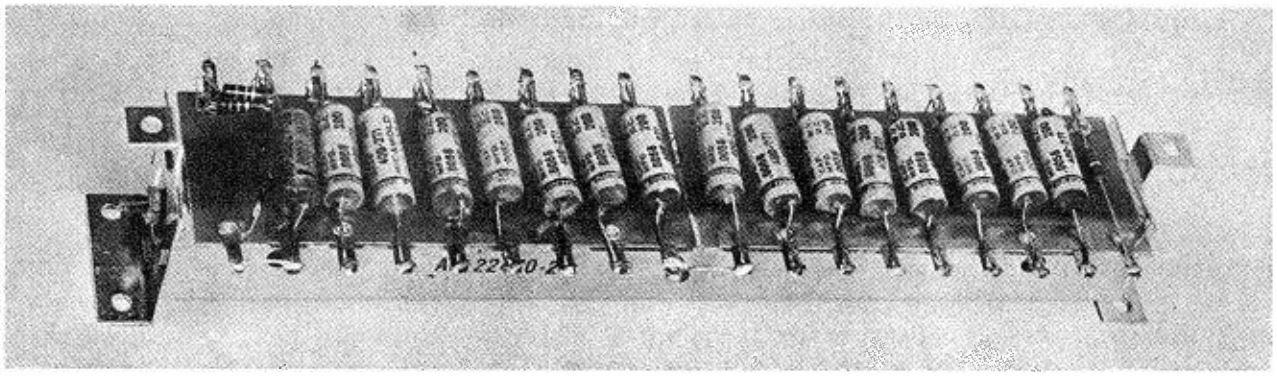

FIGURE 16. VIBRATO LINE BOX

The output from the manuals, through their respective matching transformers, is connected to the 2 channel pre-amplifier. Either of the two matching transformers can feed a signal into either input channel, depending on whether the corresponding "Vibrato ON" tab is pressed or not.

Signals entering the "non-vibrato" channel (tube V-101) are amplified and fed directly into the intermediate section of the amplifier V-102A; while signals going into the "vibrato" channel (tubes V-103 and V-104A) pass through the vibrato system first. The output signal of the vibrato system is amplified by V-102B and combined with the "non-vibrato", and pedal signals at the grid of the intermediate amplifier.

Suitable tonal balance is secured in the "non-vibrato" channel by a feedback network connected from plate to grid of V-101. Similar tonal balance is provided in the "vibrato" channel by a feedback network connected from plate to grid of V-103. There is a second feedback network connected between plate & grid of V-104A. The two channels are balanced by adjusting R-108.

PERCUSSION SECTION:

All of the busbars in the upper manual with the exception of the sub-fundamental, sub-third and eighth harmonics, are routed through the percussion switch assembly and the primary windings of the percussion matching transformer T-403. The 1-1/4 harmonic is routed likewise. (This harmonic is not available on the drawbars), but is used only for the chime effect.

With the percussion switches in the off position the signal from the manual busbars is routed directly to the upper manual drawbars.

Depending on which percussive effect is in use, the harmonics necessary to produce this effect will be routed, first through one of the primary windings of the percussion matching transformer and then on to the drawbars. The signals induced in the primary windings of T-403 are converted to push-pull and fed to the grids of V-105. The percussion pulses are supplied to the grids of V-105 from the percussion keying drive control. The percussion signal which appears on the plates of V-105 is

passed on to the grids of V-106. The signal is then taken off of V-106A and fed to the percussion level control. From this point the signal is routed through the "Drawbar-percussion" tablet to the "Add Vibrato" tablet. Depending on the position of the "Add Vibrato" tablet, all of the percussive effects will sound either with or without vibrato.

PERCUSSION AND REITERATION DRIVER:

The percussion and reiteration effects are controlled by a key contact, or contacts, in the upper manual. With the "Reiterate" switch off and a percussion tab on, the following takes place; the keying voltage is applied to one side of C-201 cau causing a pulse to appear at the collector of Q-201. This pulse is then passed on to the emitter of Q-202, which causes Q-202 to conduct for one cycle. The positive pulse from the emitter then goes through Diode D-201 and charges condenser C-204. The charge on C-204 is now dissipated through R-207 and R-411 to ground. This creates a short percussion time for the Marimba, Xylophone and Banjo signals. R-411 is switched out of the circuit to provide a longer percussion time for the chime and guitar signals. Until, all keys are released, a new pulse cannot be generated and no further percussive effects will take place. With the "Reiteration" switch on, the following takes place; when a key is depressed on the upper manual, a positive voltage is applied to the base of the reiterator driver Q-202. This causes Q-202 to conduct and produces a large pulse at the collector which immediately stops any further conduction. At the same time when the pulse is taking place in the emitter circuit, charging C-204 through D-201, the charge on C-204 is now dissipated through R-207 and R-208 (reiteration rate control). The reiteration rate is variable from 4 to 20 cycles per second. The reiterator driver will not conduct again until the charge on C-204 has been dissipated thereby dropping the emitter voltage to a point where it will conduct again. As long as a key, or keys are depressed, the reiteration action will continue.

HARP SECTION: SEE FIGURE 20

The signal input to the harp keyers comes directly from the tone generator (frequencies 37 through 85). These signals are applied to the emitter of the transistors Q-501 (there are 49 identical circuits, one for each frequency). A small bias voltage (.3V) is applied to the base of all harp keyers through 10K resistors. With the "Harp Sustain" Tablet depressed, a keying voltage is applied to the harp control busbar. When a key in the range between the second "C" and the top "C" of the upper manual is depressed, the harp control voltage is applied through R-504 and R-502 to the base of Q-501. At the same time, this control voltage is applied to condenser C-502. The application of this voltage causes the transistor to conduct. This conduction will continue as long as the keys are depressed, and will continue after the keys have been released for a time predetermined by the discharge time of C-502.

The signals from the collectors of Q-501 are then routed through Q-521 and Q-522.

In addition to the above functions, the following also takes place; when the "Harp Sustain" tablet is depressed, the second harmonic busbar signal is connected through a primary winding on T-403. The result is that, anytime a key is depressed a signal is generated in the secondary of T-404. This second harmonic signal (same pitch as Harp Signal) is introduced to the emitter of Q-521. The purpose of this signal is to enhance the harp effect by providing an instantaneous signal in the harp channel.

The output of Q-522 is routed through the "Drawbar-Percussion" switch and to the "Add Vibrato" switch. Depending on the position of the "Add Vibrato" tablet, the harp will sound either with or without vibrato.

CYMBAL AND BRUSH GENERATOR ASSEMBLY: SEE FIGURE 22

This assembly is basically a "White Noise" generator feeding two gating transistors, the outputs of which are shaped and fed to a common transistor amplifier.

CYMBAL/PEDAL

With the "Cymbal/Pedal" tablet depressed, and a pedal depressed, a keying voltage is applied to one plate of C-909. A like charge now appears on the opposite plate through Diode D-904. This voltage now passes through D-905 charging C-910 and applying the keying voltage to the base of Q-906. This voltage causes Q-906 to conduct, amplifying the "White Noise" from Q-904. This noise is coupled to the base of Q-906 through C-904.

The collector circuit of Q-906 is a broadly tuned resonant circuit of approximately 8 K. C. The output of this circuit is fed to the cymbal-brush amplifying transistor Q-903 and on to the expression control.

The decay time of the cymbal effect is governed by C-910 and R-916, while the shaping and keying are controlled by R-914, R-915 and C-909. The cymbal effect will occur each time a pedal is depressed.

BRUSH/LOWER

With the "Brush/Lower" tablet depressed, and a lower manual key depressed, a small variation in D. C. voltage occurs at the base of Q-901. This small variation is amplified by Q-901 and appears as a larger varying potential on one plate of C-901. A like variation now appears on the opposite plate through Diode D-901. This voltage now passes through Diode D-902, charging C-902 and applying the voltage to the base of Q-902. This voltage causes Q-902 to conduct, amplifying the white noise from Q-904. This noise is coupled to the base of Q-902. The collector circuit of Q-902 is a broadly tuned resonant circuit of approximately 11 K. C. The output of this circuit is fed to the Cymbal-Brush amplifying transistor Q-903 and on to the expression control.

The decay time of the brush effect is governed by C-902 and R-903.

ON EARLY UNITS

A portion of the "Volume Soft" switch is located in the emitter circuit of Q-903 to vary the gain of Q-903 by switching C-907 in or out of the circuit.

SPECIAL EQUIPMENT

RADIO, PHONOGRAPH, OR MICROPHONE

A phonograph, radio, or microphone amplifier will play through the organ speakers if connected to the grid, pin 2 of V-301B. This can be performed without going into the power amplifier, in the following manner. Purchase a Switchcraft type 330F "Y connector". Remove connector cable from WH terminal on power amplifier. Insert "Y connector", and reinsert connecting cable previously removed. The jack remaining open will now be a phono input. The radio, phonograph, or microphone should have a volume control since the organ swell will not affect the signal. For diagram showing this connection see Figure 17 Page 22.

The device (radio, phonograph, or microphone) should have an output level of about 1/2 volt maximum, and must have its own volume control, as neither the expression pedal nor the "Volume Soft" tablet will affect it. The organ may be played at the same time.

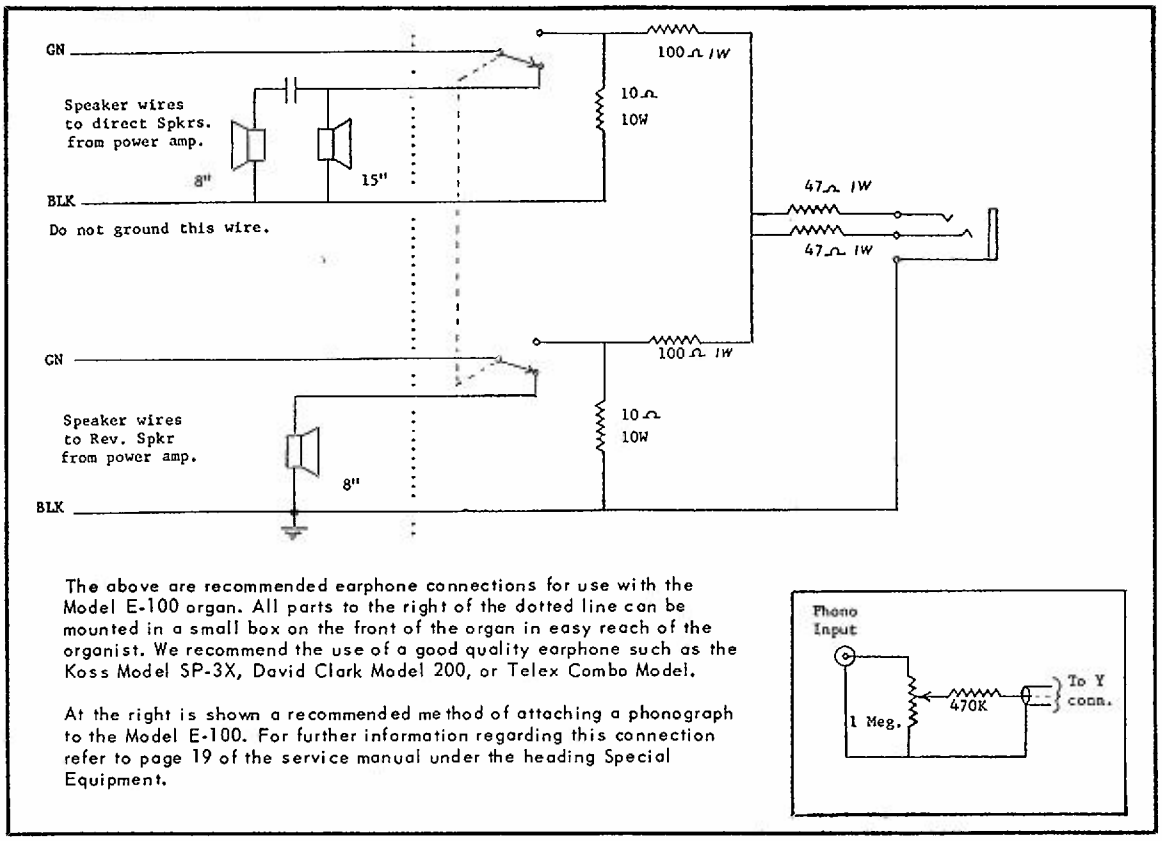

FIGURE 17. PHONO EARPHONE CONNECTION DIAGRAM

EARPHONE CONNECTIONS

Earphones can be added to the console for practice purposes so as not to disturb others. One method of attaching earphones is shown in Figure 17 above.

EXTENSION SPEAKER

An additional speaker, of the permanent magnet type, may be attached to the organ if special circumstances make it desirable. It should be connected to the two voice coil terminals of the 15 inch speaker. It is essential that the speaker be at least 10 inches in diameter and be mounted in an adequate baffle to bring out the organ pedal notes properly. There will not be any reverberation on this speaker. If a reverberation signal is desired it will be necessary to connect a second speaker as described above, to the two voice coil terminals of the 8 inch speaker located in the upper left hand corner as viewed from the rear.

Hammond Organ tone cabinets may be used as extension speakers. There is a five pole receptacle located on the main power amplifier chassis for this purpose.

SPECIAL POWER SOURCES

The organ must always be connected to an alternating current source of the voltage and frequency specified on the name plate. If the only available power source is direct current or has a frequency different from that specified, it will be necessary to provide a converter or motor generator of at least 250 watts capacity.

If the frequency of the power source is not regulated (that is, if an electric clock will not keep correct time), the pitch of the organ will not be correct and may be irregular. In this case write to the factory service department for assistance, being sure to give all pertinent information.

ORGAN DOES NOT PLAY

(a) If the generator motor does not operate when the switch is "ON" and if the tubes do not light, check the power wiring, power switch, line cord, line cord plug, and wall outlet.

(b) If the generator turns and the tubes light, but no sound can be obtained with all controls in playing position, the most likely source of trouble is the amplifier. In most respects this is a conventional amplifier circuit, and the schematic diagram, Figure 30, will enable the service man to locate the trouble.

ONE KEY DOES NOT PLAY OR A HARMONIC IS MISSING
(Tests to be made with "Drawbars" tab depressed)

This may mean a dirty key contact, a broken connection, or a dead note in the generator. The steps below will serve to isolate the trouble.

(a) Ordinarily only one of the several frequencies used on the key will be missing. This can be determined by holding the key and operating each drawbar for that manual, observing on which drawbar the key fails to play. Reference to the manual wiring chart, Figure 9, will tell which frequency number is missing.

(b) See whether the same frequency is missing where it is used on other keys of the same manual. The wiring chart will tell with what other key and what other drawbar you should get the same frequency. If it is missing on one key but not on others, a key contact is probably dirty. In some cases it may be cleared by striking the key 15 or 20 times in a rapid staccato manner to loosen the dirt. If this procedure is not effective, adjustment of the busbar shifter for that manual will clear it. (See "Manuals" section on prior page for location and manner of adjustment.) This will slide the busbars endwise so they present a clean contact surface. In extreme cases, it may be necessary to hold down the faulty key while making the adjustment.

(c) If the frequency is missing on all keys of one manual but not on the other manual, look for a break in the cable connecting one manual to the other.

(d) If the frequency is missing on both manuals, check the manual-to-generator cable or the generator itself.

(e) The output of any single frequency on the tone generator may be checked by pulling out any manual drawbar and connecting a clip lead from the back end of the drawbar to the generator terminal in question. See Figure 6 for location of all generator terminals. If the generator is all right, the note will play loudly.

CAUTION: Never test the tone generator with an outside source of current such as a continuity meter, as serious damage may result to the sensitive filter transformers and permanent magnets. By the above method, all necessary tests of the tone generator may be made with the current supplied by the generator itself.

(f) If it fails to play, try touching the clip to the input side of the filter coil (not the grounded tap) and the input side of the filter condenser (figure 8) in order to check these parts. Disconnect the condenser to eliminate the possibility of a grounded transformer. If the signal is

still missing at the magnet coil terminal, it means that the tone wheel is not turning, the coil is defective, or the magnet is not properly adjusted.

(g) If the tone wheel is not turning, the frequency of the other wheel on the same shaft will also be missing (with the exception of a few wheels which are alone). On the generator magnet location drawing (figure 8), the two frequencies whose numbers are connected by a dotted line are on the same shaft. Another way to check the wheel is to raise the generator slightly and feel the wheel with your finger to see if it is turning. Each wheel is located directly behind its magnet, shown in figure .

(h) If the magnet coil is defective, the generator must be returned to the factory, as replacement of a coil necessitates dismantling the entire generator.

(i) It is possible, although unlikely, that the magnet may have become loose and moved so far from the wheel as to make the note inaudible. It may be adjusted as described in the following paragraph.

ONE NOTE IS WEAK

(a) Trace the note as described in the preceding section to see whether weakness is due to dirty contact, poor connection, defective filter or reduced output of magnet coil. Check at each point by comparing intensities with higher and lower frequency numbers.

(b) It is possible that one or more notes may be acoustically weak, due to the room and the furnishings, although the actual signal level is equal to that of adjacent notes. This can be checked by reading voltages of the various notes on an output meter connected to the voice coil terminals on the amplifier. All notes will not give equal output, but voltage should vary smoothly from note to note. In this test variations of less than 30% should be ignored.

(c) Each magnet is set at the factory, with the set screw partially loosened, while observing an output meter. Experience has shown that the magnets seldom need adjustment and that setting them without proper equipment involves danger of damaging both magnet and wheel. Therefore it is not recommended that the service man attempt this adjustment.

HUM

(a) A loud 60 cycle or 120 cycle hum in the speaker may come from some nearby electrical appliance. It may be picked up by the matching transformer, the vibrato line, or the console wiring. Hum from this source will disappear by removing the three pole white plug from top of preamplifier.

It may be eliminated by moving either the console or the appliance.

(b) Any other hum must originate in the amplifier circuit, and can generally be cured by replacing one or more of the electrolytic condensers.

(c) In case hum originates in the amplifier but is not due to the electrolytic condensers, its source can be isolated by successively removing tubes or by grounding successive points in the signal circuit.

(d) Adjust hum control.

REPLACING TUBES

(a) The vacuum tubes are all standard radio types and can be tested in the usual way. Figure 26 shows the location of tubes in the amplifier.

(b) If tube V-105 is replaced, check percussion cutoff adjustment as explained under "Adjustments of Pre-Amplifier".

PROCEDURE FOR REMOVING PARTS IN NEED OF REPAIR OR REPLACEMENT

The following procedures require the removal of back and top. The back is removed by taking out the fourteen visable screws. Top removal is accomplished by taking out the two screws which secure it to the back stretcher. The front of the top has a snap fitting, released by pulling up.

NOTE: The underside of the top has a metallic liner, which is grounded to a common ground through a ground strap. This must be removed.

TO REPLACE A BROKEN TAB OR REMOVE A TAB SWITCH ASSEMBLY

(a) Remove two Phillips screws from front of control panel that hold bank of switches associated with tab or switch to be replaced.

(b) To replace a tab, remove lock washer from either end of switch assembly, and pull rod out so it just clears broken tab. It may be necessary to tilt assembly so that free end of rod will clear adjacent switch assembly.

(c) Remove remains of broken tab and insert new piece.

Note: A small bronze spring washer will be found between tab and one side of switch assembly. Be sure this is reinserted with new tab.

TO REPLACE PILOT LIGHT OR RUN SWITCH (First pull out line plug)

(a) These items accessible with top removed.

(b) Replace bulb with No. 12 GE 6.3V, .15A miniature 2 pin.

(c) To replace running switch, unsolder two black leads from generator power panel.

(d) Compress springs on sides of switch and push through front of control panel.

TO REPLACE DRAWBAR OR DRAWBAR KNOB (EXCEPT PEDALS)

Note: On early units the drawbar and its contact spring must be replaced as a unit.

(a) Unsolder wire on drawbar on which work is to be performed.

(b) Pull drawbar out to position eight: with suitable tool depress contact spring from rear. Continue to pull drawbar past exposing drawbar contact. Pull back carefully bronze damper spacing on underside of drawbar, rear. Remove entire bar.

(c) Knob can now be replaced or attached to new drawbar.

(d) Reinstall, by sliding drawbar in and resoldering wire.

TO REPLACE DRAWBAR OR DRAWBAR KNOB (pedals)

(a) Remove screw located between the two pedal drawbars holding fibre stop washer.

(b) Remove drawbar from front of organ slowly.

(c) Knob can now be replaced or attached to new drawbar.

(d) Slide drawbar back, lock in place and reinstall stop washer.

(e) To position pedal pots properly, with drawbar completely in, lift rack gear clear of nylon gear and rotate top of gear towards rear of console as far as possible.

TO REPLACE DRAWBAR ASSEMBLIES

(a) Unsolder nine wires from ends of drawbar assemblies to preset switches (5 LOWER MANUAL, 4 UPPER MANUAL)

(b) Remove 10 hex head screws securing control panel to its base.

(c) Lay back control panel, exercising caution.

(d) Unsolder wires from drawbar assembly being replaced.

(e) Unsolder heavy black and grey wires from end of drawbar assembly being replaced.

(f) Remove six hex head screws securing drawbar assembly to base.

(g) Replace assembly by reversing above procedure.

TO REMOVE UPPER MANUAL KEY

(a) Remove four screws securing control panel base to manual end support.

(b) Loosen two screws (do not remove) securing brace from control panel base to each end of pre-amplifier.

(c) Remove upper manual busbar plug.

(d) Pivot control panel and base back as far as possible.

(e) Using 1/4" tool loosen key mounting screw.

(f) To remove a black key, loosen its key mounting screw (see figure 4), unhook key from screw and lift out key.

(g) To remove a white key loosen its key mounting screw (see figure 4) and those of adjacent black keys. Unhook these keys from screws, push them back, and lift out white key.

TO REPLACE LOWER MANUAL KEY:

NOTE: To preform the following operations you will require the use of a ratcheting offset (yankee) screw driver with an extension

handle. This handle may be a piece of flat steel stock taped to the tool so that its over all length is about 9 inches. Another helpful item is a 6 X 6 inch piece of 1/8" masonite.

1. Remove the upper manual front strip.

2. Remove the 4 hex head screws securing the front tabs of the lower manual cover. Insert a screw driver between the cover and console front rail and push cover down.

3. By looking in the space between the bottom of the playing keys and the top of console front rail identify the key comb assembly associated with the key to be replaced.

4. Remove the two screws that secure the key comb to the manual bed. It may be necessary to tap key comb lightly to release it.

5. After keys are released remove key comb from channels.

6. Slide 6 X 6 inch piece of masonite under keys in area previously occupied by the key comb.

7. Setting ratchet so as to loosen, line up blade of offset screw driver with slot in screw of key to be removed.

8. After screw driver is positioned depress key against screw driver which is in turn backed up by the piece of masonite. Operate rachet until screw is removed.

9. Repeat this operation for other screw and reverse procedure to replace key.

CAUTION: Do not overtighten screws when installing new key.

HINT: When reinserting key comb leave all keys in their UP position being careful not to turn back the up stop felts located in key channels.

TO REMOVE MANUAL CHASSIS:

(a) Remove harp keyer assembly as outlined on page 28 paragraph 3.

(b) Disconnect red harness from keyer assembly.

(c) Remove all cable ties and clamps associated with red harness.

(d) Unsolder black manual harness from generator.

(e) Remove line box and preamplifier from manual chassis and rest on top of generator.

(f) Remove four screws that secure control panel base to chassis supports and carefully lay control panel back. It will be necessary to disconnect upper manual busbar plug.

(g) Remove lower manual terminal cover by removing eight hex head wood screws, four in front rail and four in console above speaker grille.

(h) Remove five bolts that secure manual chassis to console case. Three are accessible in front of console immediately above speaker grille.

The remaining two are accessible from the underside of generator shelf.

(i) Loosen lower manual support screws located on inside of front rail.

(j) Lift manual assembly straight up so that lower manual busbar plug is accessible. Disconnect plug.

(k) Manual may now be removed from console by lifting up and then out over front rail.

(l) Reinstall, reversing above procedure.

TO REMOVE GENERATOR

(a) Remove nine scanner wires from vibrato small switch (4) and line box (5).

(b) Unplug blue plug from pre-amplifier.

(c) Unsolder black, grey and yellow harness from generator terminals.

(d) Remove three ground wires, one on right hand end of generator terminal strip. Two additional heavy wires directly in front of scanner (ground) must also be unsoldered.

(e) Remove all wires from generator power terminal panel.

(f) Release all wire ties on top of generator shelf.

(g) Remove four bolts securing generator to shelf.

(h) Remove generator.

(i) Reinstall, reversing above procedure.

TO REMOVE HARP KEYER ASSEMBLY OR INDIVIDUAL HARP KEYER BOARD

(a) Remove four hex head screws securing keyer to brackets.

(b) Loosen right rear bracket and turn to permit complete assembly to be removed.

(c) Individual keyer boards will be released by first removing three screws on the rear of assembly. Loosen screws in center of assembly and move board toward rear.
Note: All cable termination on this board is of the solderless spin type. Removal and replacement of any wire will require soldering.

TO REMOVE EXPRESSION PEDAL

(a) Remove fourteen screws that secure swell pedal housing to console case.

(b) Unsolder the shielded cable from cymbal brush generator.

(c) Unsolder the shielded cable from end of click filter nearest the swell pedal.

(d) Unplug the white and brown signal cables from the power amplifier.

(e) Remove four screws securing swell pedal to the organ.

(f) Reinstall, reversing above procedure.

TO REMOVE PEDAL SWITCH.

(a) Unsolder yellow harness from generator terminal strip.

(b) Unsolder the black wire and the shielded cable that are part of the pedal switch harness from the terminal strip on right hand manual support block.

(c) Unsolder the blue and gray wires at the pedal divider board.

(d) Remove the three hex head mounting screws passing through the lower shelf.

NOTE: Power amplifier chassis must be removed for access to right hand screw.

(e) Remove the two large hex head screws located at either end of pedal keyboard support rail and remove pedal switch from organ.

(f) Reinstall, reversing above procedure.

TO REMOVE REITERATOR CHASSIS.

(a) Pull off REITERATION RATE and BRUSH-CYMBAL control knobs.

(b) Remove hex nut securing control to panel.

NOTE: Use appropriate tool to avoid marring finish on control panel.

(c) Unsolder nine wires at reiterator chassis that connect to control panel.

(d) Reinstall, reversing above procedure.

TO REMOVE VIBRATO SCANNER:

The scanner is mounted on a bracket with three screws. This bracket is in turn mounted on the right end of generator with four hex head screws.

(a) Loosen cable clamp on scanner and free cables.

(b) Remove two outer hex head screws holding scanner mounting bracket to generator using a small socket wrench or box ratchet wrench.

(c) Loosen two inner hex head screws (do not remove).

(d) Move scanner unit to right until clear of generator shaft and then slide toward rear of organ off of inner screws.

(e) Reinstall, reversing above procedure.

EARLY PERCUSSION SYSTEM

See Figure 18

Early "E" series instruments used a preamplifier chassis coded A0-69-0. Located on this chassis was a control designated Percussion Level. Electrically, it was located across the output of the percussion portion of the console preamplifier.

These organs also incorporated a reiterator chassis with a control mounted on the rear apron. This control was designated Percussion Keying Drive. This control was located, electrically, across the output of the reiteration chassis.

When setting organs of this vintage, set the preamp mounted percussion level control to maximum and use the control on the rear of the reiterator chassis for the percussion level adjustment.

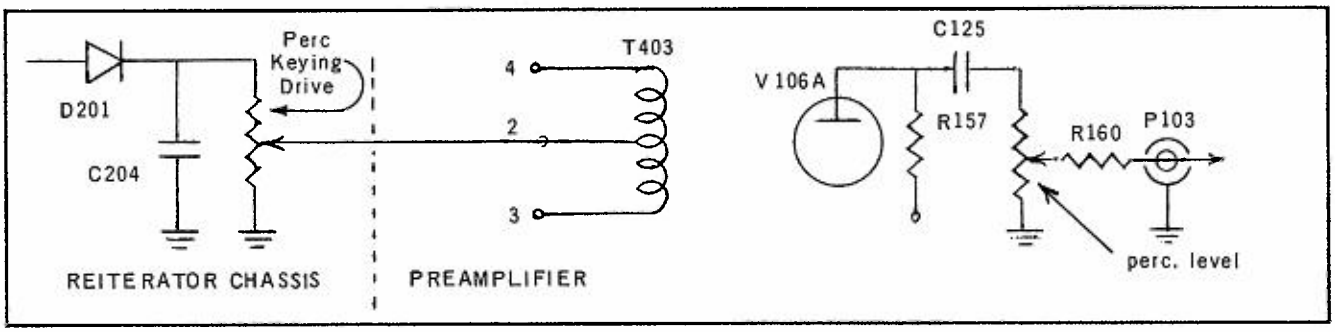

FIGURE 18.

Later series instruments use the system shown in Figure 19.

Note that the control previously located across the output of the percussion section of the preamplifier has been deleted and replaced by a fixed value resistor.

The control previously located on the reiterator chassis has been moved, physically to the preamplifier and now functions as the percussion level control. Electrically, it is still located across the output of the reiterator chassis.

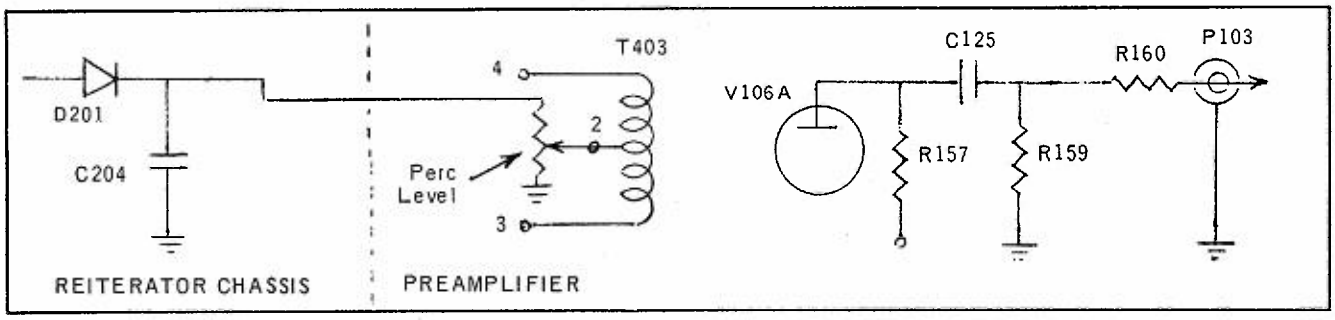

FIGURE 19.

ADJUSTMENT PROCEDURES

To properly make the following adjustment settings, you should have the following equipment:

1. An AC VTVM such as Simpson Model 715 for $75.00, or a Heathkit Model IM-21 for $34.00 in "kit" form, or Model IMW-21 for $53.00 "Ready Built".

2. A Quality Volt OHM Meter, such as Simpson Model 260-5 for $58.00.

We have found a single meter, Heathkit Model IM-25, in "kit" form for $85.00 or Model IMW-25 "Ready Built" for $121.95, to be an acceptable substitute for both the above meters.

Before adjustments can be made it will be necessary to:

1. Remove console back cover.

2. Remove console top. Be sure to remove shield foil ground wire. (On 200 series, unplug Music Rack Light).

NOTE: Before making any AC output adjustments, check the following DC voltages.

1. Identify plug P-310 located on top of the power amplifier chassis near the 7591 output tubes. Connect a meter between pin 2 (center pin) of this plug and ground. Meter should indicate that pin 2 is approximately -22 volts to the chassis.

2. Set meter range to closest setting between 1.5 to 5.0 volts. Connect meter across pins 1 and 3 of P-310, meter should read zero. If meter indicates either positive or negative, adjust the bias set control near the plug so that meter reads zero.

NOTE: Keys or pedals called by numbers are counted from low note end of the organ.

OUTPUT AND BALANCE SETTINGS

All of the following settings are made with:

A. Swell Pedal wide open.

B. All tabs UP, except as specified.

For the following adjustments an AC VTVM should be connected between chassis ground and points indicated. Point A is the Green wire on the 15 inch speaker. Point B is the Green wire on the Reverberation speaker.

NOTE: The following settings apply to E-100 and E-300 series only. For E-200 series, follow instructions on following pages.

Before starting this procedure, set Percussion Level and REITERATION RATE controls to a full clockwise position.

Meter between chassis ground and point indicated.

1. A Depress DRAWBAR and PERCUSSION tab. Pull out first Brown drawbar of the upper manual group. Depress key 25 and adjust Organ Level control for a reading of 1.0 volts.

2. A Add ON UPPER tab to registration in Step 1. Adjust Vibrato Balance control for a reading of 1.0 volts.

3. A Push in first Brown drawbar and depress BANJO tab. Depress key 25 and adjust Percussion Cutoff control until note is barely audible.

4. A Add REITERATION tab to the BANJO tab, depressed in Step 3. Partially depress the highest key on the upper manual to the point.where the reiteration thump is heard. Wedge key in this position. Adjust Reiteration Noise Nulls A and B for minimum audible keying thump and meter reading.

5. A Leaving the REITERATION and BANJO tab depressed, depress key 25. Adjust Percussion Level control for a meter reading of .5 volts. After adjustment lift all tablets.

6. B Setup the following drawbar registration on the upper manual drawbars, 000607080. Depress both REVERBERATION tabs and keys 1, 2. 3, 4, and 5 on the upper manual. Adjust Reverb Level control for a meter reading of 3.0 volts.

NOTE: Some early "E" series do not contain a Harp or Pedal Level control.

OMIT STEPS #7, #9, and #10 on 300 SERIES

7. A Depress the HARP SUSTAIN tab. Depress keys 13, 15, and 17, and adjust Harp Level control located on Harp Preamp Board for a reading of 1.4 volts.

8. A Pull out the first Pedal drawbar and depress Pedal Number 12. Adjust the Pedal Level control located on the Pedal Divider Board, for meter reading of 2.75 volts, after adjusting push Pedal drawbar IN.

9. A Set BRUSH-CYMBAL LEVEL control, located on control panel, to full clockwise position. Depress CYMBAL PEDAL tab. Depress any pedal rapidly, observe fluctuating output reading. Adjust CYMBAL LEVEL control on brush and cymbal board for a reading of 3.0 volts.

10. A Depress BRUSH LOWER tab. Play any three keys repeatedly on lower manual, and adjust Brush Level control to attain reading identical to that in Step 9.

11. A Adjust Hum Balance control on Power Amplifier for minimum level. With all drawbars IN and all tabs UP, hum and noise should be less than .025 volts.

E-200 ADJUSTMENT PROCEDURES

Before starting this procedure, set Percussion Level control to a full clockwise position.

Meter between chassis ground and point indicated.

1. A Depress GREAT DRAWBAR tab. Pull out first Brown drawbar of the Great manual group. Depress key 25 and adjust Organ Level control for a reading of 1.0 volts.

2. A Add ON GREAT tab to registration in Step 1. Adjust Vibrato Balance control for a reading of 1.0 volts.

3. A Push in first Brown drawbar and depress CHIME tab. Depress key 25 and adjust Percussion Cutoff control until note is barely audible.

4. A Referring to sketch below, temporarily jumper terminals A & B together with a 33K resistor. Connect an 18K resistor from terminal C to ground, and jumper terminals A and D together. Adjust Reiteration Noise Nulls A and B for minimum audible keying thump and meter reading. NOTE: Leave jumpers IN through Step #5.

Rear of Console

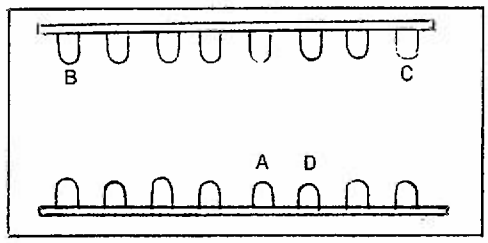

5. A Depress CHIME SOLO tab and adjust Percussion Level control for a meter reading of .5 volts. After setting, lift CHIME SOLO tab.

6. B Setup the following drawbar registration on the GREAT manual drawbars, 000607080. Depress both REVERBERATION tabs and keys 1, 2, 3, 4, and 5 on the Great manual. Adjust Reverb Level control for a meter reading of 3.0 volts. After adjustment push in all drawbars and lift all tabs.

NOTE: Some early E-200 series do not contain a Harp or Pedal Level control.

7. A Depress the HARP SUSTAIN tab. Depress keys 13, 15, and 17, and adjust Harp Level control, located on Harp Preamp Board for a reading of 1.8 volts.

8. A Pull out the first Pedal drawbar and depress Pedal Number 12. Adjust the Pedal Level control located on the Pedal Divider Board for meter reading of 2.75 volts, after adjusting push Pedal drawbar IN.

9. A Adjust Hum Balance control on Power Amplifier for minimum hum level. With all drawbars IN and all tabs UP, hum and noise should be less than .025 volts.

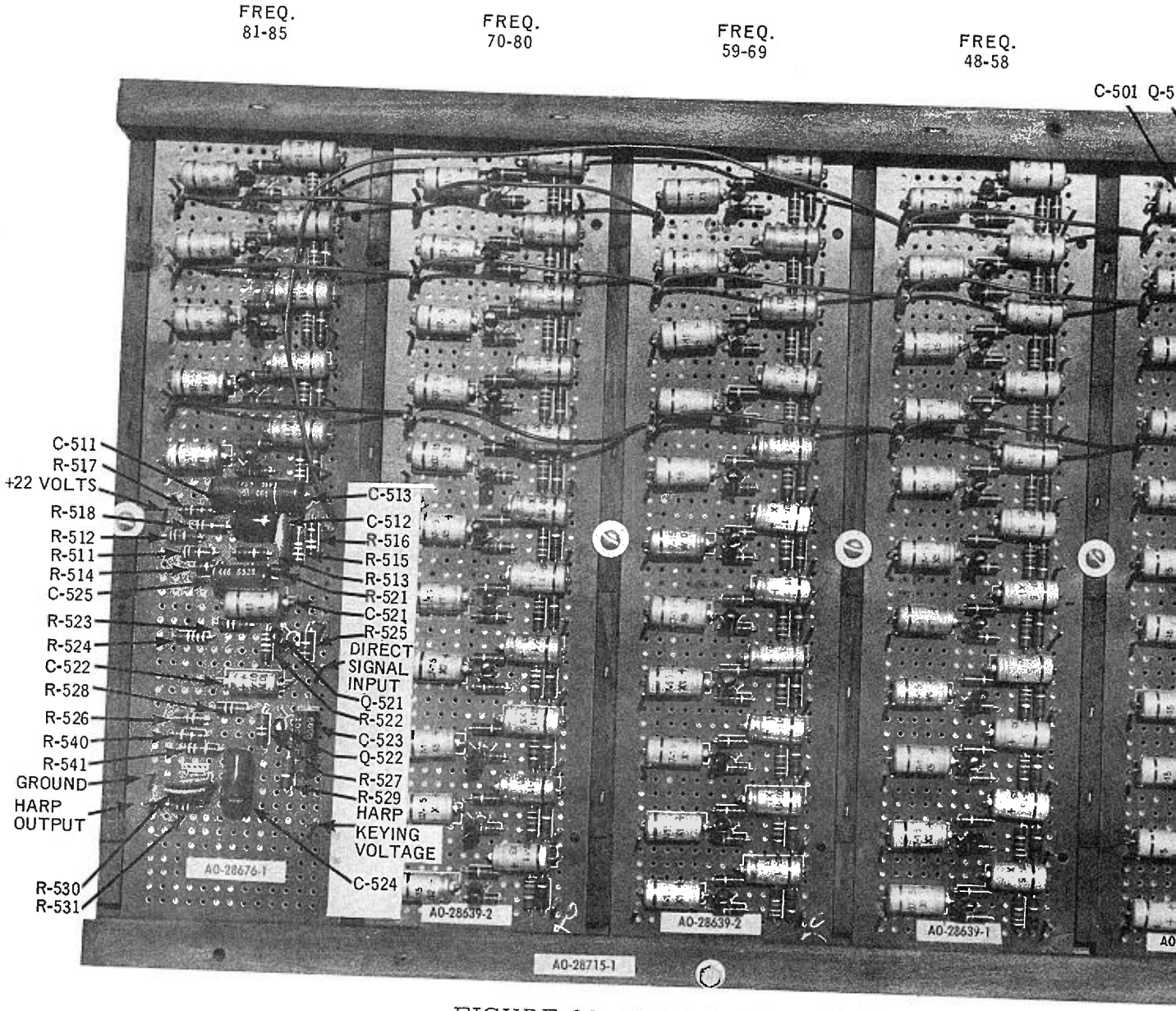

FIGURE 20. HARP KEYER ASSEMBLY

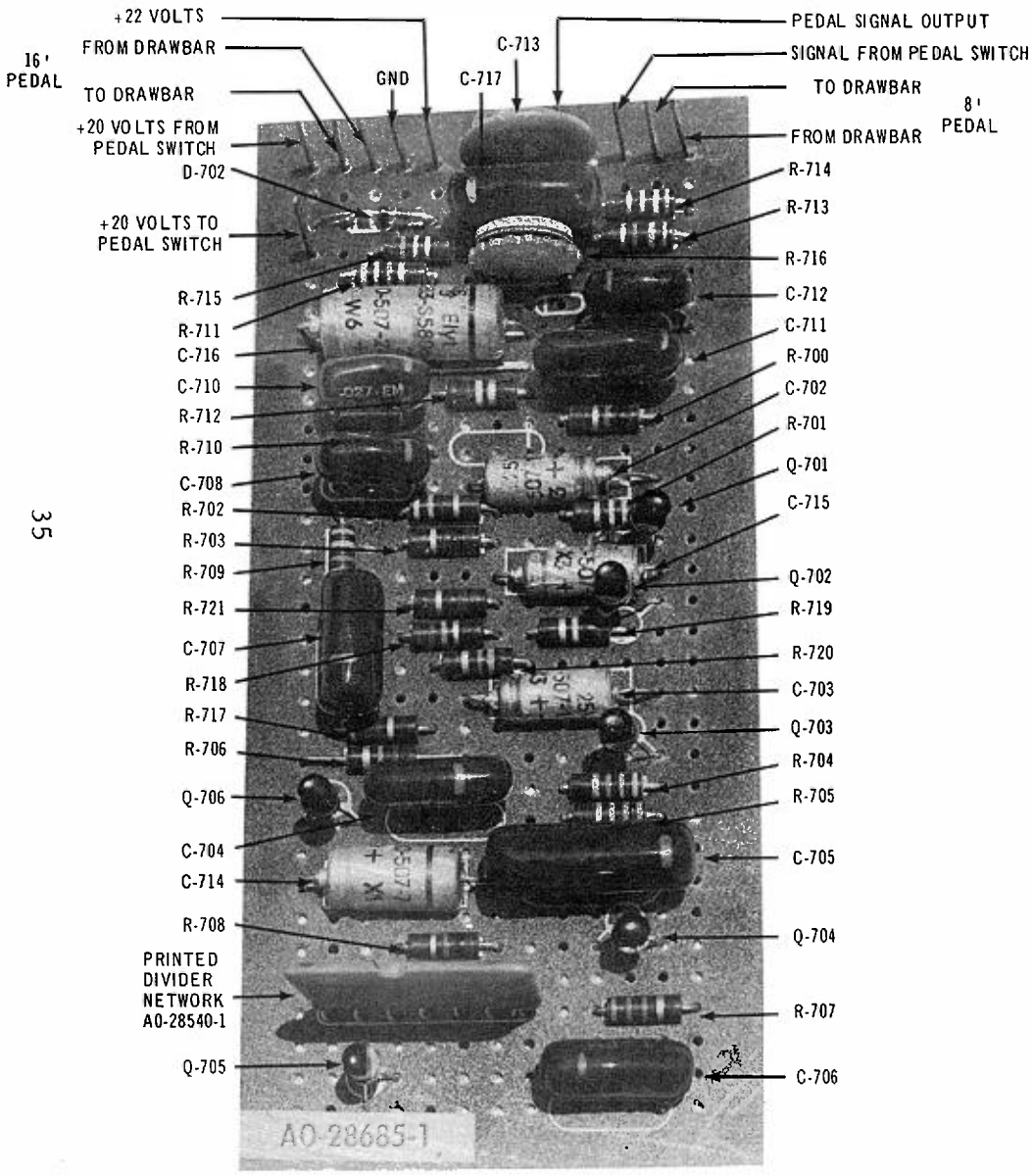

PEDAL DIVIDER BOARD
FIGURE 21

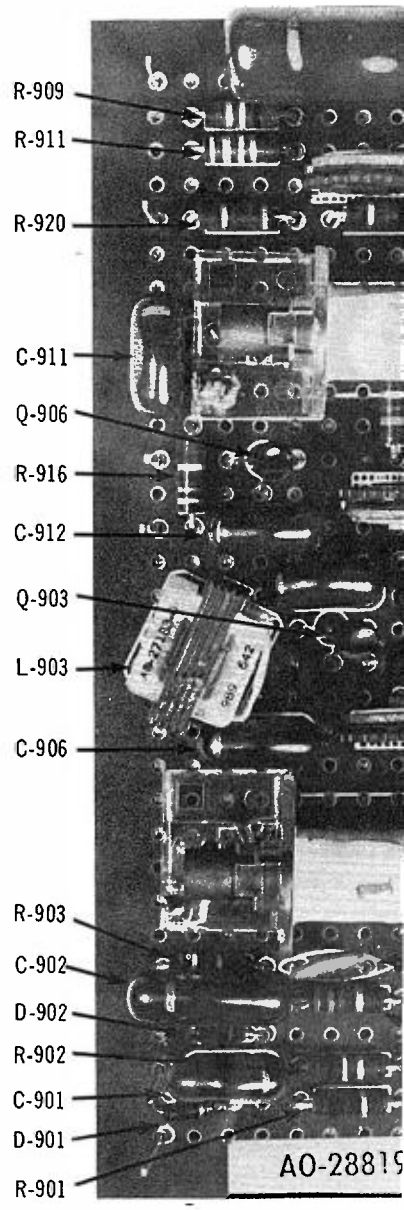

BRUSH AND CYM
(LATER UNITS)

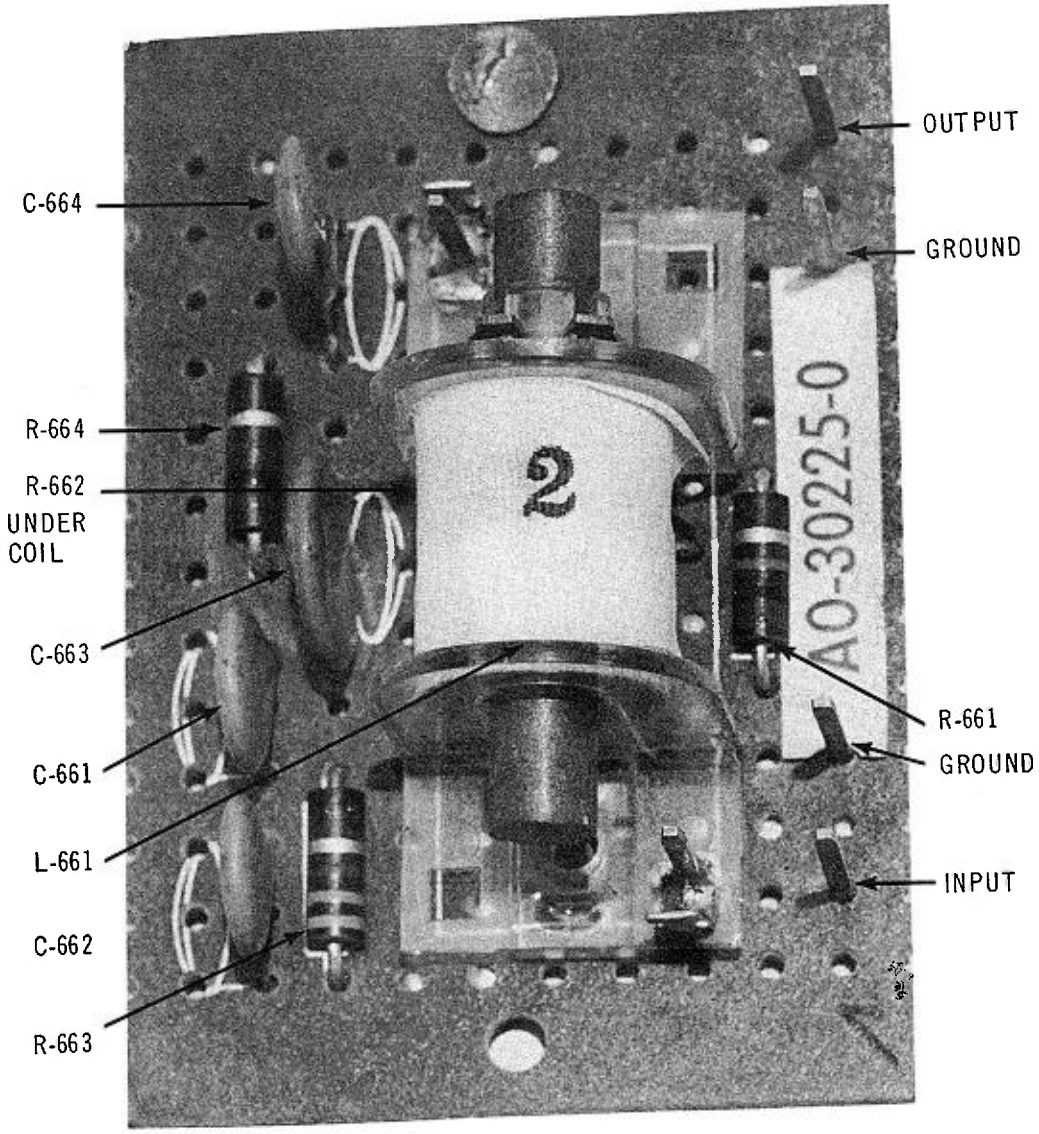

CLICK FILTER
FIGURE 23

NOTES:

SUBJECT: Transistor and diode commercial part Replacement recommendations — TECHNICAL BULLETIN 24

SYMBOL	HAMMOND PART NO.	COMMERCIAL EQUIVALANT
D201	01-2601	IN3604
Q201	01-2601	2N3393
Q202	01-2601	2N3393
D301	01-2303-1	IN3028
D302	01-2405-2	IN2069 or IN3189
Q501	01-2101	2N3393
Q521	01-2101	2N3393
Q522	01-2101	2N3393
D701	01-1501	IN281 or IN457
D702	01-2601	IN3604
Q701	01-2101	2N3393
Q702	01-2101	2N3393
Q703	01-2101	2N3393
Q704	01-2101	2N3393
Q705	01-2101	2N3393
Q706	01-2101	2N3393
D901	01-2601	IN3604
D902	01-2601	IN3604
D903	01-2408	
D904	01-2601	IN3604
D905	01-2601	IN3604
Q901	01-2104	2N3393
Q902	01-2104	2N3393
Q903	01-2104	2N3393
Q904	01-2106	2N3394
Q906	01-2108	2N3391

TECHNICAL BULLETIN

To reduce output hum (where present and objectionable, ground tone generator to power amp. chassis, using 18 gauge wire.

To reduce hum in Harp, remove T-404 Harp coupling transformer. Turn it over 180 degrees and remount, eliminating insulating washer.

Ground shield of pedal divider board output cable at divider board end.

To eliminate Percussion pop when "Drawbars and Percussion" tab is depressed, add A470K 1/2 watt resistor in Percussion amp. chassis as indicated in drawing that follows:

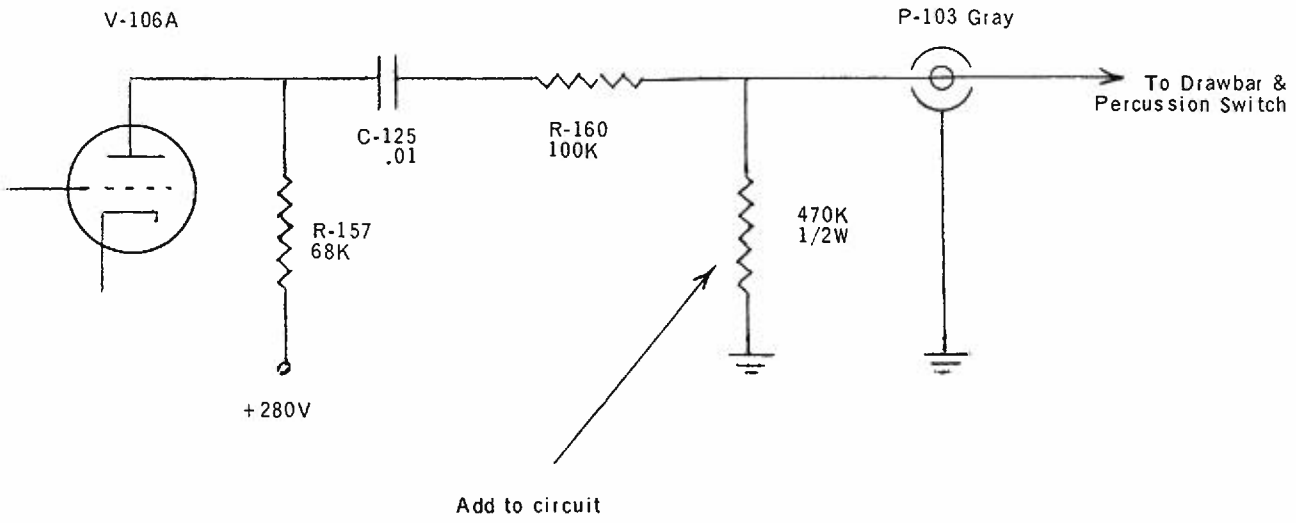

TECHNICAL BULLETIN 30

CIRCUIT PROTECTION FOR ZENER DIODE, D301 E-300 Series

If you find it necessary to replace D-301; 22 volt Zener Diode, we recommend adding resistor R-602; 1000 ohm, 2 watt, to the circuit as shown below. This diode is located in the Power Supply Section of the large chassis on the Console floor.

NOTE: Because the addition of this resistor is a simple matter, it is recommended that you make this revision on all E-300 instruments you encounter.

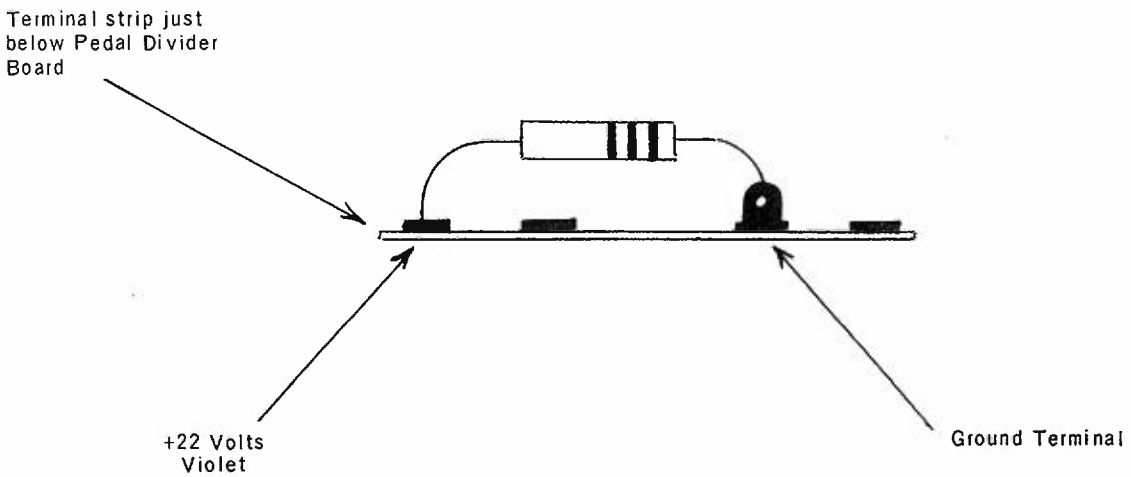

TECHNICAL BULLETIN 46

SWITCHING TRANSIENT ("E" SERIES) E-100 Series

To relieve the above condition in the "Vibrato On" switches on "E" series instruments, we recommend rerouting the Yellow and Green wires going to the preamplifier, as indicated in the diagram below. To complete the circuit it will be necessary to add condensers; C-401, .039 MFD/100 volts as indicated in the diagram below.

The drawing on the left represents the original wiring method, while the drawing on the right represents the above changes.

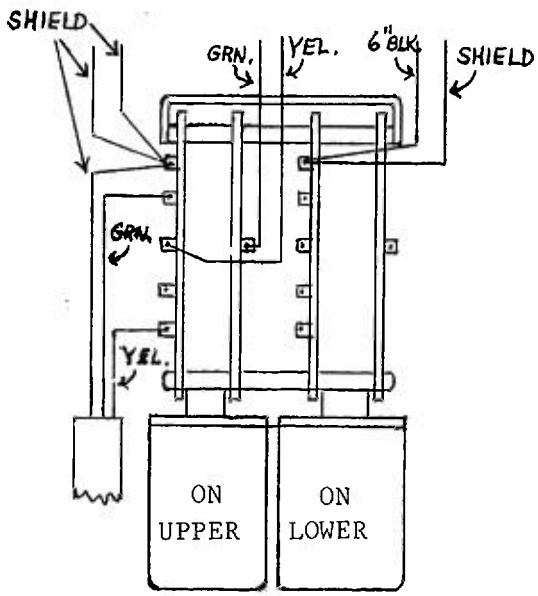

ORIGINAL WIRING

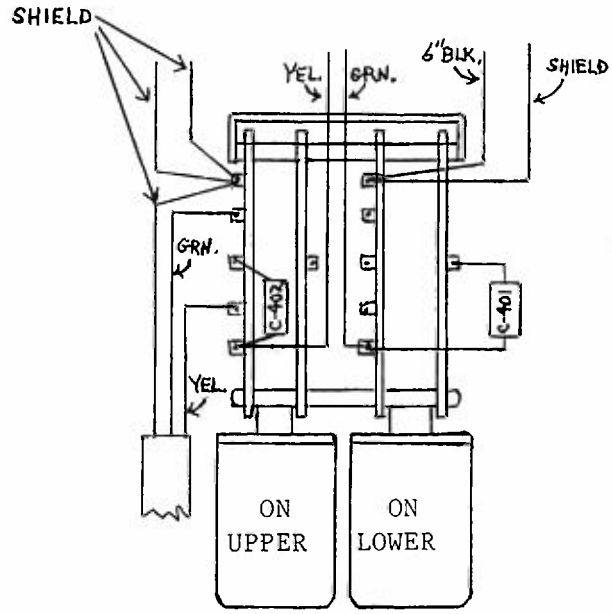

NEW WIRING

TECHNICAL BULLETIN 53

STANDARDIZATION OF BRUSH & CYMBAL BOARD FOR PRODUCTION USE AND SERVICE REPLACEMENT E-100 Series

Later instruments incorporate a new type Brush & Cymbal Board (A0-28819-0). This new board replaces older type A0-28695.

This board differs significantly from previsou types, in that a special noise diode is used, rather than a transistor, as a source of the brush and cymbal effect.

Three variable controls are incorporated on the board. These controls perform the following functions: (See Figure Page 40)

Control #1 - Brush level
Control #2 - Cymbal burst level
Control #3 - Cymbal sustain level.

When replacing older Brush & Cymbal Boards in E-100 series organs, install new board with six terminal lugs facing swell pedal housing. Remove all connections from old board. Remove board and any external controls which may be attached. When using new board, it will be necessary to revise the signal routing of the Brush & Cymbal signal.

Proceed as outlined below:

Step 1. Remove console top.

Step 2. Locate Yellow and Green shielded cable which previously connected to Brush and Cymbal Board. Free this cable from all ties along bottom and side of case. Reroute cable behind all control tabs to area of Volume Soft switch (cut off excess cable).

Step 3. Remove the 2.2 meg. ohm resistor and the Red and Black twisted pair from the Volume Soft switch. Slide twisted pair through ties and discard. Install 100K resistor* in same location as 2.2 meg resistor.

Step. 4. Using one of the shielded cables* supplied, attach the inner conductor to the bottom terminal of the 100K resistor. Attach the drain wire to the lug on the top of the switch where a shield wire is already connected.

Step. 5. Connect the Green wire of the Yellow and Green shielded cable to the top terminal of the 100K resistor.

Step. 6. It will be noted that there are four empty terminals on the top of the Volume Soft switch. Connect a 33K* resistor between any two of these empty terminals. Connect the Yellow wire of the Yellow and Green shielded cable to one end of this 33K resistor.

Step. 7. Using the other shielded cable* supplied, connect the inner conductor to the free end of the 33K resistor. Solder the drain wire of this cable and the drain wire of the Yellow and Green shielded cable to same terminal as in Step 4 above, along with other drain wire.

Step. 8. Connect the other end of cable of Step 7 above, to the free end of a short, similar cable, emanating from swell pedal housing, matching inner conductors and drain wires. Tape inner conductors.

Step. 9. Connect free end of shielded cable installed in Step 4, to new board, as shown in Figure 2.

Step. 10. Connect all other wires as shown below, and redress as necessary to attain enough lead length.

Step. 11. Redress all cables in a neat and workmanship-like manner.

*NOTE: When ordering new Brush & Cymbal Board for use in the E-100 instruments, the following parts should also be ordered:
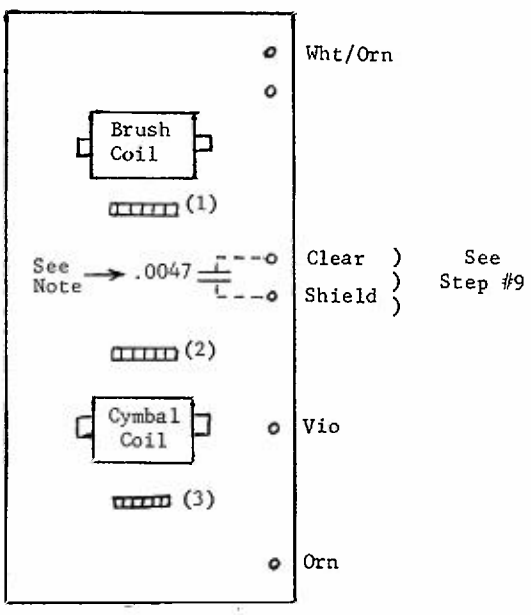
2 - A0-27095-1 Cable Assembly
1 - A0-20305080 33K Resistors
1 - A0-20305-86 100K Resistors