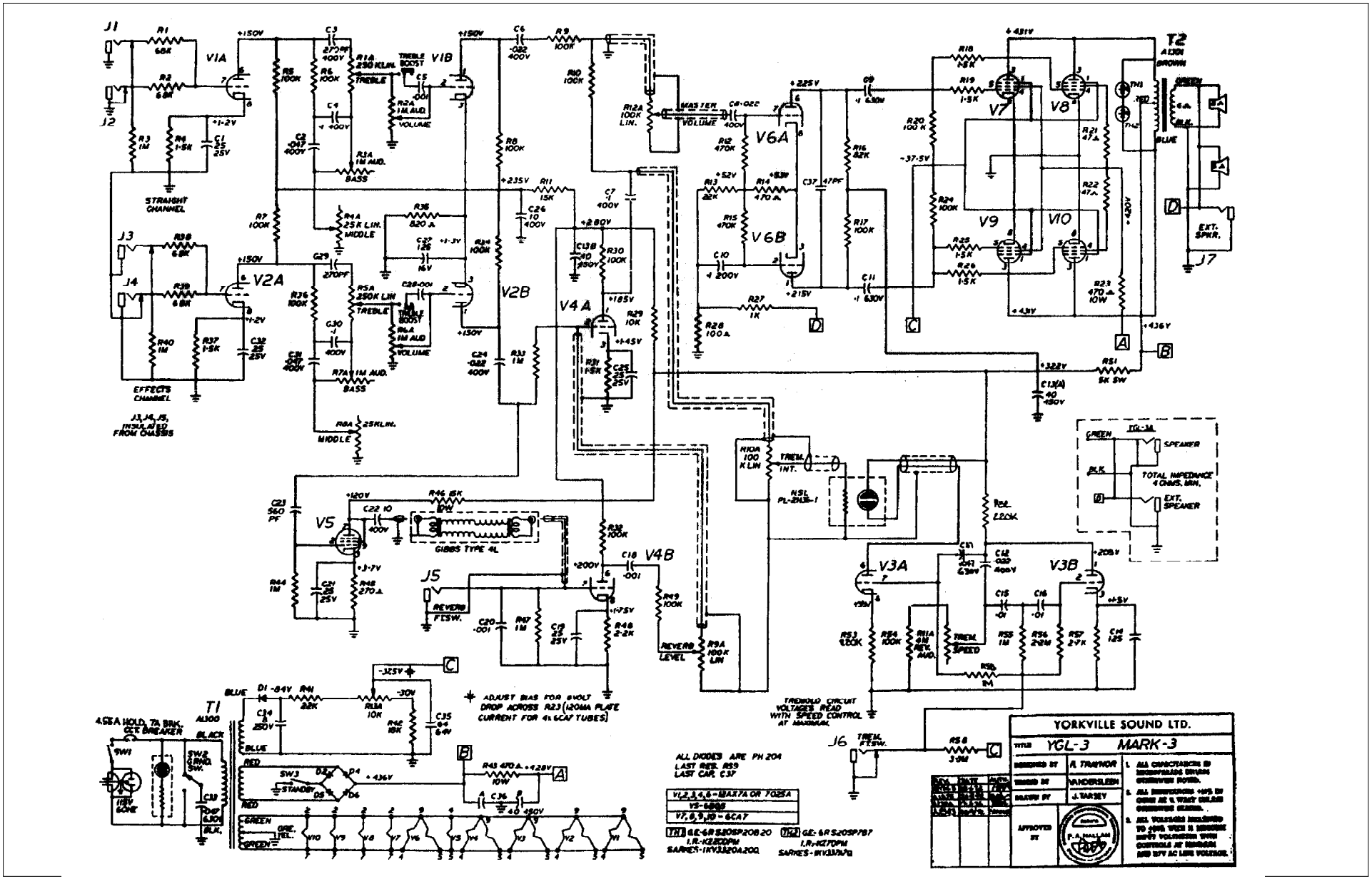
YORKVILLE SOUND LTD.
YGL-3 MARK-3
R. TRAYNOR
VANDERSLEEN
J. TARSEY
STRAIGHT CHANNEL
EFFECTS CHANNEL
J3, J4, J5, INSULATED FROM CHASSIS
GIBBS TYPE 4L
REVERB FTSW.
MASTER VOLUME
TREBLE BOOST
TREBLE
VOLUME
BASS
MIDDLE
TREM. INT.
TREM. SPEED
TREM. FTSW.
REVERB LEVEL
EXT. SPKR.
TOTAL IMPEDANCE 4 OHMS, MIN.
EXT. SPEAKER
ADJUST BIAS FOR 8 VOLT DROP ACROSS R23 (120MA PLATE CURRENT FOR 4 6CA7 TUBES)
THRESHOLD CIRCUIT VOLTAGES READ WITH SPEED CONTROL AT MAXIMUM.
ALL DIODES ARE PH 204
LAST REF. R59
LAST CAP. C37
V1,2,3,4,6-MAX7A OR 7025A
V5-6BQ6
V7,8,9,10-6CA7
TH1 G.E.-6R S20SP20B20 I.R.-K2820PM SARKES-INV3320A20Q
TH2 G.E.-6R S20SP7B7 I.R.-K270PM SARKES-INV3370A70
4.5EA HOLD, 7A BRK. CKT BREAKER
T1 A1300
T2 A1301
STANDBY
GIBBS

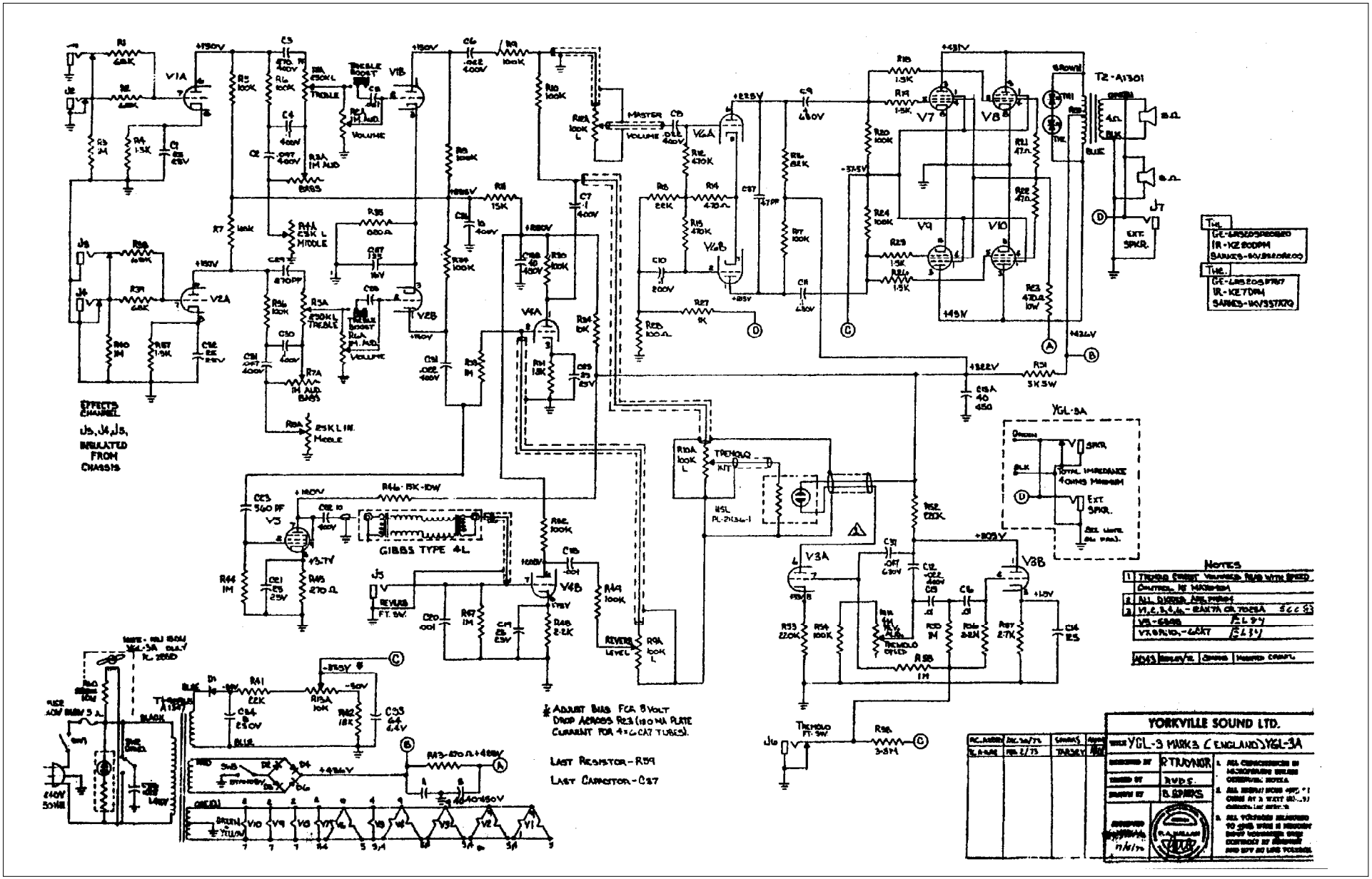
YORKVILLE SOUND LTD.
YGL-3 MARK 3 (ENGLAND) YGL-3A
R. TRAYNOR
B. SPARKS
T2-A1301
GIBBS TYPE 4L
EFFECTS CHANNEL
J5, J4, J3, INSULATED FROM CHASSIS
MASTER VOLUME
TREBLE BOOST
VOLUME
BASS
TREBLE
MIDDLE
TREMOLO
REVERB
LEVEL
EXT. SPKR.
NOTES
LAST RESISTOR - R59
LAST CAPACITOR - C27