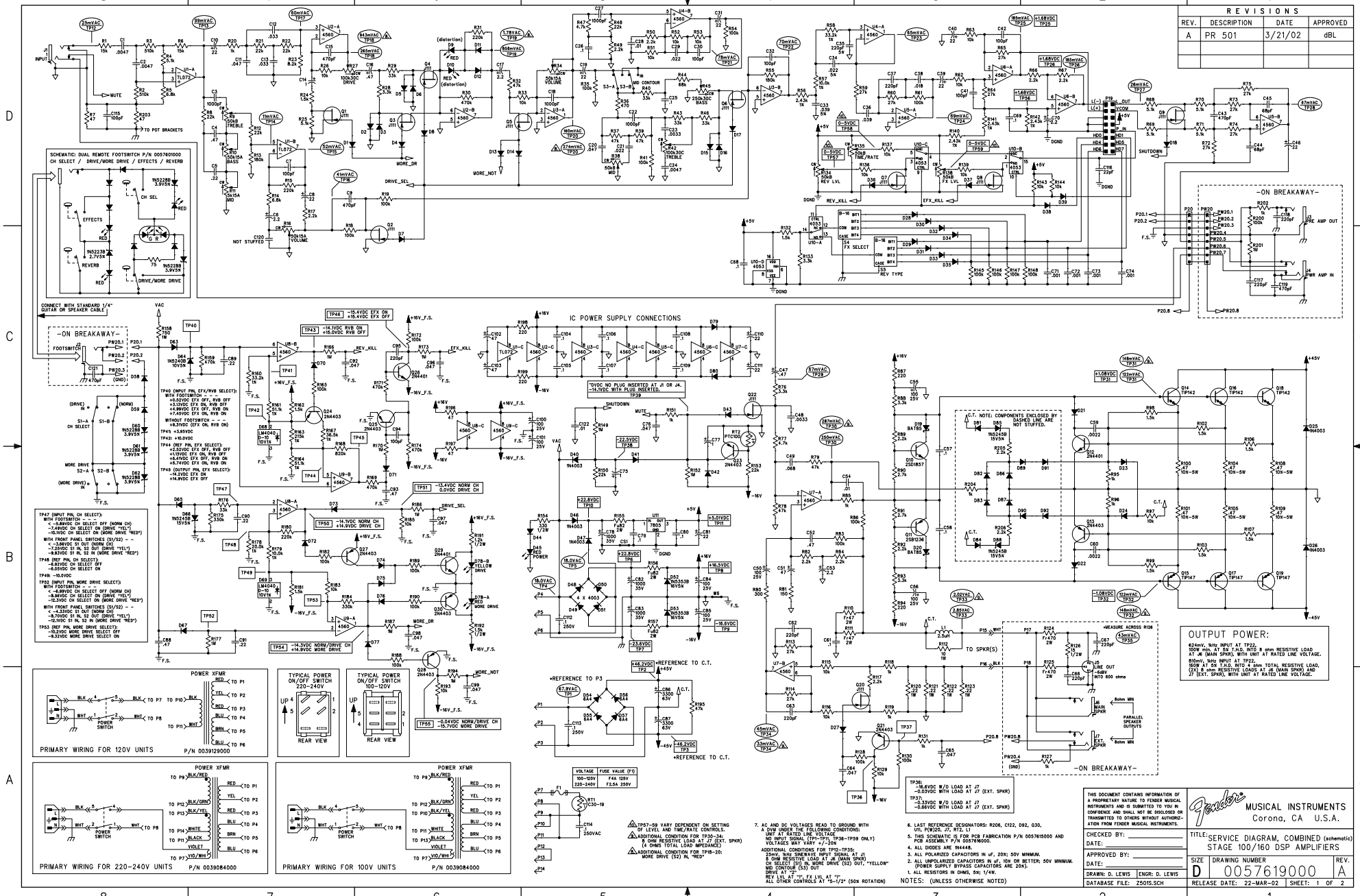

REVISIONS			
REV.	DESCRIPTION	DATE	APPROVED
A	PR 501	3/21/02	dBL

OUTPUT POWER:

624mV, 1kHz INPUT AT TP22, 100W min. AT 5% T.H.D. INTO 8 ohm RESISTIVE LOAD AT J6 (MAIN SPKR), WITH UNIT AT RATED LINE VOLTAGE.

810mV, 1kHz INPUT AT TP22, 160W AT 5% T.H.D. INTO 4 ohm TOTAL RESISTIVE LOAD, (2X) 8 ohm RESISTIVE LOADS AT J6 (MAIN SPKR) AND J7 (EXT. SPKR), WITH UNIT AT RATED LINE VOLTAGE.

TP36: -16.6VDC W/O LOAD AT J7 -0.03VDC WITH LOAD AT J7 (EXT. SPKR)

TP37: -0.33VDC W/O LOAD AT J7 -0.66VDC WITH LOAD AT J7 (EXT. SPKR)

VOLTAGE	FUSE VALUE (F1)
100-120V	F4A 125V
220-240V	F2.5A 250V

1. TP57-59 VARY DEPENDENT ON SETTING OF LEVEL AND TIME/RATE CONTROLS.
2. ADDITIONAL CONDITION FOR TP30-34: 8 OHM RESISTIVE LOAD AT J7 (EXT. SPKR) (4 OHMS TOTAL LOAD IMPEDANCE)
3. ADDITIONAL CONDITION FOR TP18-20: MORE DRIVE (S2) IN, "RED"
4. TP47 (INPUT PIN, CH SELECT): WITH FOOTSWITCH - - - < -5.89VDC CH SELECT OFF (NORM CH) -7.49VDC CH SELECT ON (DRIVE "YEL") -10.1VDC CH SELECT ON (MORE DRIVE "RED") WITH FRONT PANEL SWITCHES (S1/S2) - - < -3.66VDC S1 OUT (NORM CH) -7.25VDC S1 IN, S2 OUT (DRIVE "YEL") -9.83VDC S1 IN, S2 IN (MORE DRIVE "RED")
TP48 (REF PIN, CH SELECT): -6.92VDC CH SELECT OFF -6.05VDC CH SELECT ON
TP49: -10.0VDC
TP52 (INPUT PIN, MORE DRIVE SELECT): WITH FOOTSWITCH - - - < -6.89VDC CH SELECT OFF (NORM CH) -8.94VDC CH SELECT ON (DRIVE "YEL") -12.3VDC CH SELECT ON (MORE DRIVE "RED") WITH FRONT PANEL SWITCHES (S1/S2) - - < -4.33VDC S1 OUT (NORM CH) -8.70VDC S1 IN, S2 OUT (DRIVE "YEL") -12.1VDC S1 IN, S2 IN (MORE DRIVE "RED")
TP53 (REF PIN, MORE DRIVE SELECT): -10.2VDC MORE DRIVE SELECT OFF -9.32VDC MORE DRIVE SELECT ON
5. TP40 (INPUT PIN, EFX/RVB SELECT): WITH FOOTSWITCH - - - +0.52VDC EFX OFF, RVB OFF +3.13VDC EFX ON, RVB OFF +4.99VDC EFX OFF, RVB ON +7.45VDC EFX ON, RVB ON WITHOUT FOOTSWITCH - - - +9.31VDC (EFX ON, RVB ON)
TP41: +3.95VDC
TP42: +10.0VDC
TP44 (REF PIN, EFX SELECT): +2.52VDC EFX OFF, RVB OFF +3.13VDC EFX ON, RVB OFF +6.41VDC EFX OFF, RVB ON +5.74VDC EFX ON, RVB ON
TP45 (OUTPUT PIN, EFX SELECT): -14.2VDC EFX ON +14.9VDC EFX OFF
TP46: -15.4VDC EFX ON +15.4VDC EFX OFF
TP43: -14.1VDC RVB ON +15.0VDC RVB OFF
TP51: -13.4VDC NORM CH 0.0VDC DRIVE CH
TP50: -14.1VDC NORM CH +14.9VDC DRIVE CH
TP54: -14.3VDC NORM/DRIVE CH +14.9VDC MORE DRIVE
TP55: -0.04VDC NORM/DRIVE CH -15.7VDC MORE DRIVE
TP39: "0VDC NO PLUG INSERTED AT J1 OR J4. -14.1VDC WITH PLUG INSERTED.
TP36: -16.6VDC W/O LOAD AT J7 -0.03VDC WITH LOAD AT J7 (EXT. SPKR)
TP37: -0.33VDC W/O LOAD AT J7 -0.66VDC WITH LOAD AT J7 (EXT. SPKR)
6. LAST REFERENCE DESIGNATORS: R206, C122, D92, Q30, U11, P(W)20, J7, RT2, L1
7. AC AND DC VOLTAGES READ TO GROUND WITH A DVM UNDER THE FOLLOWING CONDITIONS: UNIT AT RATED LINE VOLTAGE NO INPUT SIGNAL (TP1-TP11, TP36-TP59 ONLY) VOLTAGES MAY VARY +/-20%
ADDITIONAL CONDITIONS FOR TP12-TP35: 25mV, 1kHz SINEWAVE INPUT SIGNAL AT J1 8 OHM RESISTIVE LOAD AT J6 (MAIN SPKR) CH SELECT (S1) IN, MORE DRIVE (S2) OUT, "YELLOW" MID CONTOUR (S3) OUT DRIVE AT "2" REV LVL AT "1", FX LVL AT "1" ALL OTHER CONTROLS AT "5-1/2" (50% ROTATION)
NOTES: (UNLESS OTHERWISE NOTED)

THIS DOCUMENT CONTAINS INFORMATION OF A PROPRIETARY NATURE TO FENDER MUSICAL INSTRUMENTS AND IS SUBMITTED TO YOU IN CONFIDENCE AND SHALL NOT BE DISCLOSED OR TRANSMITTED TO OTHERS WITHOUT AUTHORIZATION FROM FENDER MUSICAL INSTRUMENTS.

Fender MUSICAL INSTRUMENTS
Corona, CA U.S.A.

CHECKED BY: _____
DATE: _____
APPROVED BY: _____
DATE: _____
DRAWN: D. LEWIS ENGR: D. LEWIS
DATABASE FILE: Z501S.SCH

TITLE: SERVICE DIAGRAM, COMBINED (schematic) STAGE 100/160 DSP AMPLIFIERS

SIZE	DRAWING NUMBER	REV.
D	0057619000	A

RELEASE DATE: 22-MAR-02 SHEET: 1 OF 2