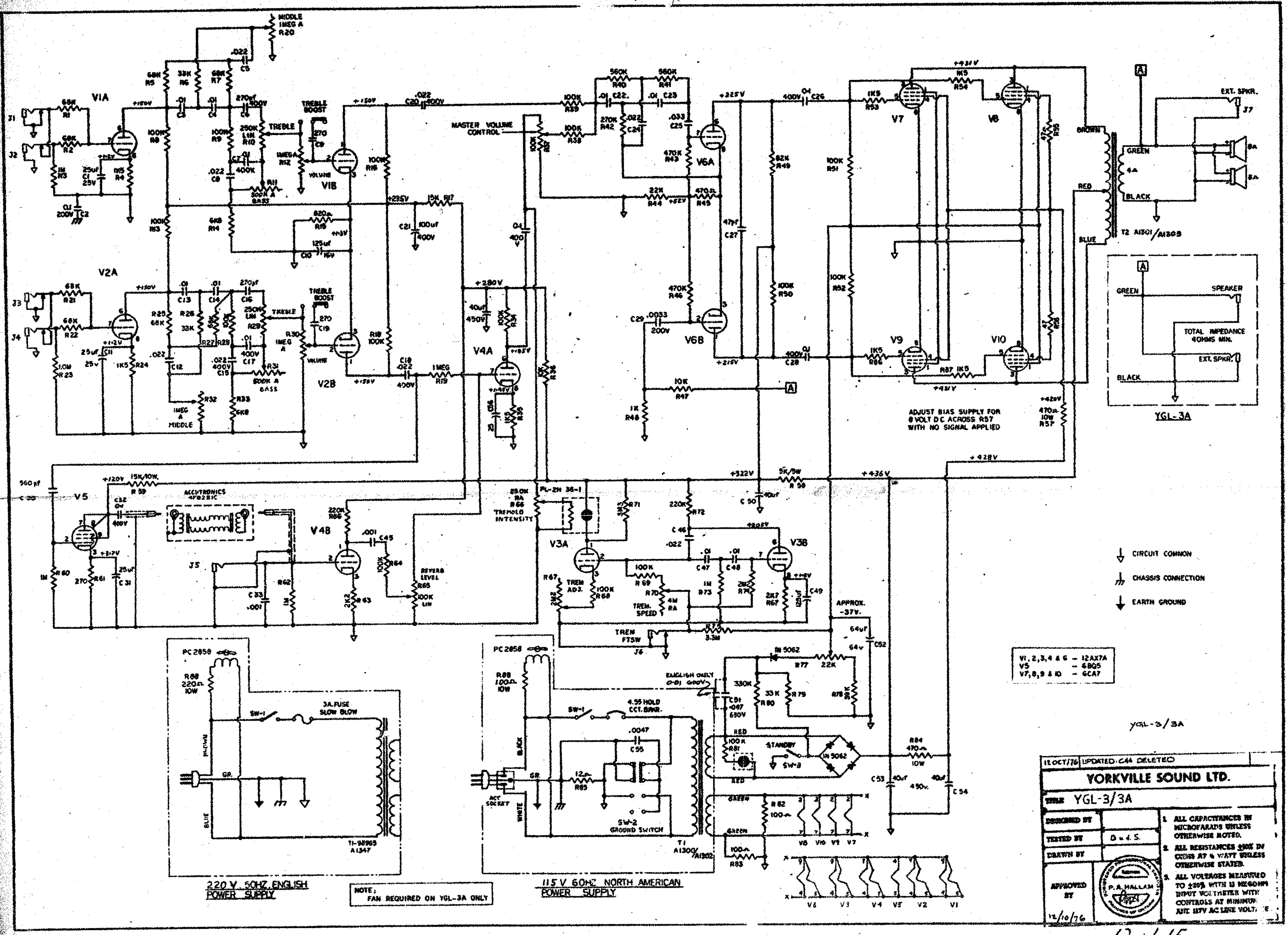

MIDDLE 1MEG A R20
V1A
V1B
V2A
V2B
V3A
V3B
V4A
V4B
V5
V6A
V6B
V7
V8
V9
V10
TREBLE BOOST
TREBLE
VOLUME
MASTER VOLUME CONTROL
ACCUTRONICS 4FB2R1C
REVERB LEVEL
TREMOLO INTENSITY
TREM ADJ.
TREM. SPEED
TREM FTSW
APPROX. -37V.
ADJUST BIAS SUPPLY FOR 8 VOLT DC ACROSS R57 WITH NO SIGNAL APPLIED
EXT. SPKR.
BROWN
GREEN
RED
BLACK
BLUE
T2 A1301/A1303
SPEAKER
TOTAL IMPEDANCE 4OHMS MIN.
YGL-3A
CIRCUIT COMMON
CHASSIS CONNECTION
EARTH GROUND
V1, 2, 3, 4 & 6 – 12AX7A
V5 – 6BQ5
V7, 8, 9 & 10 – 6CA7
PC 2858
3A. FUSE SLOW BLOW
T1-98965 A1347
220 V. 50HZ. ENGLISH POWER SUPPLY
NOTE: FAN REQUIRED ON YGL-3A ONLY
4.55 HOLD CCT. BRKR.
SW-2 GROUND SWITCH
T1 A1300/A1302
ENGLISH ONLY
STANDBY
IN 5062
ACC SOCKET
115 V 60HZ NORTH AMERICAN POWER SUPPLY
YGL-3/3A
12 OCT/76 UPDATED: C44 DELETED
YORKVILLE SOUND LTD.
TITLE YGL-3/3A
DESIGNED BY
TESTED BY D. & S.
DRAWN BY
APPROVED BY
12/10/76
P. A. HALLAM
1. ALL CAPACITANCES IN MICROFARADS UNLESS OTHERWISE NOTED.
2. ALL RESISTANCES ±10% IN OHMS AT ¼ WATT UNLESS OTHERWISE STATED.
3. ALL VOLTAGES MEASURED TO ±20% WITH 11 MEGOHM INPUT VOLTMETER WITH CONTROLS AT MINIMUM AND 117V AC LINE VOLTAGE.